Listing and Technical Evaluation Report™

A Duly Authenticated Report from an Approved Agency

Report No: 1407-07

Issue Date: August 11, 2014

Revision Date: November 20, 2026

Subject to Renewal: January 1, 2028

DRYline® TSX (Blue) Structural Sheathing and DRYline® TSX ADVANCED AMP (Blue) Structural Sheathing

Trade Secret Report Holder:

National Shelter Products, Inc.

Phone: 425-557-7968 Website: nationalshelter.com Email: support@nationalshelter.com

CSI Designations:

DIVISION: 06 00 00 - WOOD, PLASTICS AND COMPOSITES

Section: 06 12 00 - Structural Panels

Section: 06 12 19 - Shear Wall Panels

Section: 06 16 00 - Sheathing

DIVISION: 07 00 00 - THERMAL AND MOISTURE PROTECTION

Section: 07 25 00 - Water-Resistive Barriers/Weather Barriers

Section: 07 27 00 - Air Barriers

1 Innovative Products Evaluated[1]

1.1 DRYline TSX (Blue) Structural Sheathing

1.2 DRYline TSX ADVANCED AMP (Blue) Structural Sheathing

1.2.1 Unless otherwise stated in this report, where DRYline TSX (Blue) Structural Sheathing is cited, the provisions apply equally to all DRYline TSX ADVANCED AMP (Advanced Air and Moisture Protection) (Blue) Structural Sheathing.

2 Product Description and Materials

2.1 The innovative products evaluated in this report are shown in **Figure 1**.



Figure 1. DRYline TSX (Blue) Structural Sheathing

Information contained in this report was developed using report holder's confidential intellectual property (IP) and trade secrets (TS), which is protected by Defend Trade Secrets Act 2016, © DrJ Engineering, LLC

2.2 DRYline TSX (Blue) Structural Sheathing is a proprietary wall sheathing consisting of a proprietary fibrous sheathing board laminated with a water-resistant adhesive to facers on one or both sides. Facers may consist of aluminum foil, polyolefin film, aluminized polyolefin, or kraft paper.

2.3 *Material Availability*

2.3.1 *Thickness*

2.3.1.1 0.137" (3.48 mm)

2.3.2 *Standard Product Width*

2.3.2.1 48" (1,219 mm)

2.3.2.2 48 3/4" (1,238 mm)

2.3.3 *Standard Product Lengths*

2.3.3.1 96" (2,438 mm)

2.3.3.2 108" (2,743 mm)

2.3.3.3 120" (3,048 mm)

2.3.4 Other sizes are available by request.

2.4 As needed, review material properties for design in **Section 6** and the regulatory evaluation in **Section 8**.

3 Definitions[2]

3.1 New Materials[3] are defined as building materials, equipment, appliances, systems, or methods of construction, not provided for by prescriptive and/or legislatively adopted regulations, known as alternative materials.[4] The design strength and permissible stresses shall be established by tests[5] and/or engineering analysis.[6]

3.2 Duly authenticated reports[7] and research reports[8] are test reports and related engineering evaluations that are written by an approved agency[9] and/or an approved source.[10]

3.2.1 This report utilizes intellectual property and/or trade secrets to create public domain material properties for commercial end-use.

3.2.1.1 This report protects confidential Intellectual Property and trade secrets under the regulation, 18.US.Code.90, also known as Defend Trade Secrets Act of 2016 (DTSA).[11]

3.3 An approved agency is *"approved"* when it is ANAB ISO/IEC 17065 accredited. DrJ Engineering, LLC (DrJ) is accredited and listed in the ANAB directory.

3.4 An approved source is *"approved"* when a professional engineer (i.e., Registered Design Professional, hereinafter RDP) is properly licensed to transact engineering commerce. The regulatory authority governing approved sources is the state legislature via its professional engineering regulations.[12]

3.5 Testing and/or inspections conducted for this duly authenticated report were performed by an ISO/IEC 17025 accredited testing laboratory, an ISO/IEC 17020 accredited inspection body, and/or a licensed RDP.

3.5.1 The Center for Building Innovation (CBI) is ANAB[13] ISO/IEC 17025 and ISO/IEC 17020 accredited.

3.6 The regulatory authority shall enforce[14] the specific provisions of each legislatively adopted regulation. If there is a non-conformance, the specific regulatory section and language of the non-conformance shall be provided in writing[15] stating the nonconformance and the path to its cure.

3.7 The regulatory authority shall accept duly authenticated reports from an approved agency and/or an approved source with respect to the quality and manner of use of new materials or assemblies as provided for in regulations regarding the use of alternative materials, designs, or methods of construction.[16]

Information contained in this report was developed using report holder's confidential intellectual property (IP) and trade secrets (TS), which is protected by Defend Trade Secrets Act 2016, © DrJ Engineering, LLC

3.8 ANAB is an International Accreditation Forum (IAF) Multilateral Recognition Arrangement (MLA) signatory. Therefore, recognition of certificates and validation statements issued by conformity assessment bodies accredited by all other signatories of the IAF MLA with the appropriate scope shall be approved.[17] Thus, all ANAB ISO/IEC 17065 duly authenticated reports are approval equivalent,[18] and can be used in any country that is an MLA signatory found at this link: https://iaf.nu/en/recognised-abs/

3.9 Approval equity is a fundamental commercial and legal principle.[19]

4 Applicable Local, State, and Federal Approvals; Standards; Regulations[20]

4.1 *Local, State, and Federal*

4.1.1 Approved in all local jurisdictions pursuant to ISO/IEC 17065 duly authenticated report use, which includes, but is not limited to, the following featured local jurisdictions: Austin, Baltimore, Broward County, Chicago, Clark County, Dade County, Dallas, Detroit, Denver, DuPage County, Fort Worth, Houston, Kansas City, King County, Knoxville, Las Vegas, Los Angeles City, Los Angeles County, Miami, Nashville, New York City, Omaha, Philadelphia, Phoenix, Portland, San Antonio, San Diego, San Jose, San Francisco, Seattle, Sioux Falls, South Holland, St. Louis County, Texas Department of Insurance, and Wichita.[21]

4.1.2 Approved in all state jurisdictions pursuant to ISO/IEC 17065 duly authenticated report use, which includes, but is not limited to, the following featured states: California, Florida, New Jersey, Oregon, New York, Texas, Washington, and Wisconsin.[22]

4.1.3 Approved by the Code of Federal Regulations Manufactured Home Construction: Pursuant to Title 24, Subtitle B, Chapter XX, Part 3282.14[23] and Part 3280[24] pursuant to the use of ISO/IEC 17065 duly authenticated reports.

4.1.4 Approved means complying with the requirements of local, state, or federal legislation.

4.2 *Regulations*

4.2.1 *IBC – 18, 21, 24: International Building Code®*

4.2.2 *IRC – 18, 21, 24: International Residential Code®*

4.2.3 *IECC – 18, 21, 24: International Energy Conservation Code®*

4.2.4 *FBC-B – 23, 26: Florida Building Code[25] – Building (FL 47188)*

4.2.5 *FBC-R – 23, 26: Florida Building Code[25] – Residential (FL 47188)*

4.3 *Standards*

4.3.1 *ANSI/AWC SDPWS: Special Design Provisions for Wind and Seismic*

4.3.2 *ASCE/SEI 7: Minimum Design Loads and Associated Criteria for Buildings and Other Structures*

4.3.3 *ASTM D7989: Standard Practice for Demonstrating Equivalent In-Plane Lateral Seismic Performance to Wood-Frame Shear Walls Sheathed with Wood Structural Panels*

4.3.4 *ASTM E72: Standard Test Methods of Conducting Strength Tests of Panels for Building Construction*

4.3.5 *ASTM E96: Standard Test Methods for Water Vapor Transmission of Materials*

4.3.6 *ASTM E330: Standard Test Method for Structural Performance of Exterior Windows, Doors, Skylights, and Curtain Walls by Uniform Static Air Pressure Difference*

4.3.7 *ASTM E331: Standard Test Method for Water Penetration of Exterior Windows, Skylights, Doors, and Curtain Walls by Uniform Static Air Pressure Difference*

4.3.8 *ASTM E564: Standard Practice for Static Load Test for Shear Resistance of Framed Walls for Buildings*

4.3.9 *ASTM E2126: Standard Test Methods for Cyclic (Reversed) Load Test for Shear Resistance of Vertical Elements of the Lateral Force Resisting Systems for Buildings*

Information contained in this report was developed using report holder's confidential intellectual property (IP) and trade secrets (TS), which is protected by Defend Trade Secrets Act 2016, © DrJ Engineering, LLC

4.3.10 *ASTM E2178: Standard Test Method for Air Permeance of Building Materials*

4.4 Structural performance for shear wall assemblies used as lateral force resisting systems in Seismic Design Categories A through F have been tested and evaluated in accordance with the following standards:

4.4.1 *ASCE/SEI 7: Minimum Design Loads and Associated Criteria for Buildings and Other Structures*

4.4.2 *ASTM D7989: Standard Practice for Demonstrating Equivalent In-Plane Lateral Seismic Performance to Wood-Frame Shear Walls Sheathed with Wood Structural Panels*

4.4.2.1 ASTM D7989 is accepted engineering practice used to establish Seismic Design Coefficients (SDC).

4.4.2.2 Tested data generated by ISO/IEC 17025 approved agencies and/or professional engineers, which use ASTM D7989 as their basis, are defined as intellectual property and/or trade secrets.

4.4.2.3 All professional engineering evaluations are defined as an independent design review (i.e., listings, certified reports, duly authenticated reports from approved agencies, and/or research reports, are prepared independently by approved agencies and/or approved sources, when signed and sealed by licensed professional engineer pursuant to registration law.

4.4.3 *ASTM E564: Standard Practice for Static Load Test for Shear Resistance of Framed Walls for Buildings*

4.4.4 *ASTM E2126: Standard Test Methods for Cyclic (Reversed) Load Test for Shear Resistance of Vertical Elements of the Lateral Force Resisting Systems for Buildings*

5 Listed[26]

5.1 Equipment, materials, products, or services included in a List published by a nationally recognized testing laboratory (e.g., CBI), an approved agency (e.g., CBI and DrJ), and/or an approved source (e.g., DrJ), or other organization(s) concerned with product evaluation (e.g., DrJ), that maintains periodic inspection (e.g., CBI) of production of listed equipment or materials, and whose listing states either that the equipment or material meets nationally recognized standards or has been tested and found suitable for use in a specified manner.

6 Tabulated Properties Generated from Nationally Recognized Standards

6.1 *General*

6.1.1 DRYline TSX (Blue) Structural Sheathing is used as wall sheathing in buildings constructed in accordance with the IRC and IBC for light-frame wood construction.

6.1.2 DRYline TSX (Blue) Structural Sheathing is used as structural wall sheathing to provide lateral load resistance (wind and seismic) for braced wall panels used in light-frame wood construction.

6.1.3 DRYline TSX (Blue) Structural Sheathing panels are permitted to be used as wall sheathing in buildings constructed in accordance with the IBC requirements for Type V light-frame construction.

6.1.4 DRYline TSX (Blue) Structural Sheathing is used as structural wall sheathing to provide resistance to transverse loads for wall assemblies used in wood construction.

6.1.5 DRYline TSX (Blue) Structural Sheathing is used as structural wall sheathing to provide resistance to uplift loads for wall assemblies used in wood construction.

6.1.6 DRYline TSX (Blue) Structural Sheathing is also used as sheathing applied as in-fill to portions of walls that are not designed as braced wall panels or shear walls.

6.1.7 When DRYline TSX (Blue) Structural Sheathing is installed in accordance with **Section 6.3** and **Section 9**, it is an approved alternative water-resistive barrier (WRB) in accordance with IBC Section 1403.2 and IRC Section R703.2.

6.1.8 DRYline TSX (Blue) Structural Sheathing is an approved air barrier material when installed in accordance with **Section 6.4** and **Section 9**.

Information contained in this report was developed using report holder's confidential intellectual property (IP) and trade secrets (TS), which is protected by Defend Trade Secrets Act 2016, © DrJ Engineering, LLC

6.2 *Structural Applications*

6.2.1 *General Structural Provisions*

6.2.1.1 Except as otherwise described in this report, DRYline TSX (Blue) Structural Sheathing shall be installed in accordance with the applicable building regulations listed in **Section 4** using the provisions set forth herein for the design and installation of Wood Structural Panels (WSP).

6.2.1.1.1 DRYline TSX (Blue) Structural Sheathing is permitted to be designed in accordance with SDPWS for the design of shear walls using the methods set forth therein, including the perforated shear wall methodology, and subject to the SDPWS boundary conditions, except as specifically allowed in this report.

6.2.1.2 Anchorage for in-plane shear shall be provided to transfer the induced shear force into and out of each shear wall.

6.2.1.2.1 For wind design, anchor bolt spacing shall be 6' o.c. (1,829 mm) or less.

6.2.1.2.2 For seismic design, anchor bolt spacing shall be 4' o.c. (1,219 mm) or less.

6.2.1.3 The maximum aspect ratio for DRYline TSX (Blue) Structural Sheathing shall be 4:1.

6.2.1.4 The minimum full height panel width shall be 24" (610 mm).

6.2.1.5 All panel edges shall be supported with a minimum 2" (51 mm) nominal lumber.

6.2.1.6 Staples shall be a minimum 16-gauge, $^{15}/_{16}$" crown and penetrate a minimum of 1" into the stud.

6.2.1.7 Installation is permitted for single top plate (advanced framing method) or double top plate applications.

6.2.1.8 Where the sheathing from an upper story extends over the rim joist and overlaps a lower story, the sheathing shall be fastened along the sole plate of the story above at 3" o.c. Further, one row of fasteners spaced 12" o.c. shall be located along the bottom third of the rim joist. The sheathing from the story above shall overlap the sheathing on the story below by a minimum of 2". Fastening along the bottom edge of the sheathing from the story above is not required.

6.2.1.9 When an I-joist is used as the rim joist and where the sheathing from an upper story extends over the rim joist and overlaps a lower story, the sheathing shall be fastened along the sole plate of the story above at 3" o.c. Further, one row of fasteners spaced 12" o.c. shall be located along the bottom flange of the rim joist or along the top plate of the lower story. The sheathing from the story above shall overlap the sheathing on the story below by a minimum of 2".

Information contained in this report was developed using report holder's confidential intellectual property (IP) and trade secrets (TS), which is protected by Defend Trade Secrets Act 2016, © DrJ Engineering, LLC

6.2.2 *Prescriptive IRC Bracing Applications*

6.2.2.1 DRYline TSX (Blue) Structural Sheathing may be used on braced wall lines as an equivalent alternative to Method WSP of the IRC, when installed in accordance with IRC Section R602.10 and this report.

6.2.2.2 For wind design, required braced wall panel lengths for DRYline TSX (Blue) Structural Sheathing shall be as shown in **Table 1**, and shall be used in conjunction with IRC Table R602.10.3(2), which provides the required adjustments.

6.2.2.3 For seismic design, required braced wall panel lengths for DRYline TSX (Blue) Structural Sheathing shall be as shown in **Table 2**, and shall be used in conjunction with IRC Table R602.10.3(4), which provides the required adjustments.

6.2.2.4 Use of DRYline TSX (Blue) Structural Sheathing with Method CS-PF is also permitted, in accordance with **Section 6.2.3**, in lieu of WSP specified in accordance with IRC Section R602.10.6.4.

6.2.2.5 Use of DRYline TSX (Blue) Structural Sheathing with Method PFH is also permitted in accordance with **Section 6.2.4**, in lieu of WSP specified in accordance with IRC Section R602.10.6.2.

6.2.2.6 Where a building, or portion thereof, does not comply with one or more of the bracing requirements within the prescriptive section of the IRC, those portions shall be designed and constructed in accordance with IRC Section R301.1.

Information contained in this report was developed using report holder's confidential intellectual property (IP) and trade secrets (TS), which is protected by Defend Trade Secrets Act 2016, © DrJ Engineering, LLC

Table 1. Required Bracing Lengths for DRYline TSX (Blue) Structural Sheathing Installed with 1/2" Gypsum Wallboard at 24" o.c. Stud Spacing – Wind (V_{ult})[1-6]

Condition	Braced Wall Line Spacing	Length of Wall Line to be Braced (ft)									
		DRYline TSX (Blue) Structural Sheathing Intermittent Sheathing					DRYline TSX (Blue) Structural Sheathing Continuous Sheathing				
		≤ 110 mph	≤115 mph	≤ 120 mph	≤ 130 mph	≤ 140 mph	≤ 110 mph	≤115 mph	≤ 120 mph	≤ 130 mph	≤ 140 mph
One Story or the Top of Two or Three Stories	10	1.9	1.9	2.3	2.3	2.8	1.4	1.9	1.9	2.3	2.3
	20	3.3	3.3	3.7	4.7	5.1	2.8	3.3	3.3	3.7	4.7
	30	4.7	5.1	5.6	6.5	7.4	4.2	4.2	4.7	5.6	6.5
	40	6.0	6.5	7.4	8.4	9.8	5.1	5.6	6.0	7.0	8.4
	50	7.4	8.4	8.8	10.2	12.1	6.5	7.0	7.4	8.8	10.2
	60	8.8	9.8	10.7	12.1	14.0	7.4	8.4	8.8	10.2	12.1
First Story of Two Stories or Second Story of Three Stories	10	3.3	3.7	4.2	4.7	5.6	2.8	3.3	3.3	4.2	4.7
	20	6.0	7.0	7.4	8.8	10.2	5.1	6.0	6.5	7.4	8.4
	30	8.8	9.8	10.7	12.6	14.4	7.4	8.4	8.8	10.7	12.1
	40	11.6	12.6	14.0	16.3	18.6	9.8	10.7	11.6	14.0	15.8
	50	14.4	15.3	16.7	20.0	22.8	12.1	13.0	14.4	16.7	19.5
	60	16.7	18.6	20.0	23.3	27.0	14.4	15.8	17.2	20.0	23.3
First Story of Three Stories	10	5.1	5.6	6.0	7.0	7.9	4.2	4.7	5.1	6.0	7.0
	20	9.3	10.2	10.7	12.6	14.9	7.9	8.4	9.3	10.7	12.6
	30	13.0	14.4	15.8	18.1	21.4	11.2	12.1	13.5	15.8	18.1
	40	17.2	18.6	20.5	23.7	27.4	14.4	15.8	17.2	20.5	23.3
	50	20.9	22.8	25.1	29.3	33.9	17.7	19.5	21.4	24.6	28.8
	60	24.6	27.0	29.8	34.9	40.0	21.4	23.3	25.1	29.3	33.9

SI: 1 ft = 0.305 m, 1 mph = 1.61 km/h

1. Demonstrates equivalency to IRC Table R602.10.3(1). All adjustment factors from IRC Table R602.10.3(2) shall be applied. A minimum of 1/2" gypsum sheathing shall be applied to the interior side of the wall assembly and fastened with a minimum 5d cooler nails or 1 1/4" #6 types W or S screws spaced 16" o.c. at panel edges and 16" o.c. in the field of the panels.
2. DRYline TSX (Blue) Structural Sheathing shall be installed with minimum 0.120" x 1 1/4" galvanized roofing nail or minimum 15/16" crown x 1 1/4" leg 16-gauge galvanized staples spaced 3":3" (edge:field).
3. Where gypsum wallboard is not applied to the interior side of the wall assembly, bracing lengths shall be multiplied by a factor of 1.4.
4. The addition of gypsum wallboard to DRYline TSX (Blue) Structural Sheathing wall assemblies provides a benefit greater than the SDPWS additive method for wood structural panels.
5. Linear interpolation is permitted.
6. Wind speeds shown are V_{ult} in accordance with ASCE 7-16 and ASCE 7-22. Allowable stress design wind speed shall be determined in accordance with IBC Section 1609.3.1: $V_{asd} = V_{ult}\sqrt{0.6}$

Information contained in this report was developed using report holder's confidential intellectual property (IP) and trade secrets (TS), which is protected by Defend Trade Secrets Act 2016, © DrJ Engineering, LLC

Table 2. Required Bracing for DRYline TSX (Blue) Structural Sheathing Installed with 1/2" Gypsum Wallboard at 24" o.c. Stud Spacing – Seismic[1-6]

Condition	Braced Wall Line Length (ft)	Minimum Length of Braced Wall Panels Required Along Each Braced Wall Line (ft)							
		DRYline TSX (Blue) Structural Sheathing Intermittent Sheathing				DRYline TSX (Blue) Structural Sheathing Continuous Sheathing			
		SDC C[7]	SDC D_0	SDC D_1	SDC D_2	SDC C[7]	SDC D_0	SDC D_1	SDC D_2
One Story or the Top of Two or Three Stories	10	1.5	1.6	1.9	2.3	1.3	1.5	1.6	2.0
	20	3.0	3.3	3.7	4.7	2.5	2.8	3.2	4.0
	30	4.5	5.0	5.6	7.0	3.8	4.3	4.7	5.9
	40	5.9	6.7	7.4	9.3	5.0	5.7	6.4	7.9
	50	7.4	8.3	9.3	11.6	6.4	7.1	7.9	9.9
First Story of Two Stories or Second Story of Three Stories	10	2.8	3.5	4.2	5.1	2.4	3.0	3.5	4.4
	20	5.6	7.0	8.3	10.2	4.7	5.9	7.1	8.8
	30	8.3	10.5	12.6	15.3	7.1	8.9	10.7	13.0
	40	11.2	13.9	16.8	20.5	9.5	11.9	14.2	17.4
	50	13.9	17.5	20.9	25.6	11.9	14.9	17.7	21.8
First Story of Three Stories	10	4.2	4.9	5.6	NP	3.5	4.2	4.7	NP
	20	8.3	9.7	11.2	NP	7.1	8.3	9.5	NP
	30	12.6	14.7	16.8	NP	10.7	12.5	14.2	NP
	40	16.8	19.5	22.3	NP	14.2	16.7	19.0	NP
	50	20.9	24.4	27.9	NP	17.7	20.7	23.7	NP

SI: 1 ft = 0.305 m

1. Demonstrates equivalency to IRC Table R602.10.3(3). All adjustment factors from IRC Table R602.10.3(4) shall be applied. A minimum of 1/2" gypsum sheathing shall be applied to the interior side of the wall assembly and fastened with a minimum 5d cooler nails or 1 1/4" #6 types W or S screws spaced 16" o.c. at panel edges and 16" o.c. in the field of the panels.
2. DRYline TSX (Blue) Structural Sheathing shall be installed with minimum 0.120" x 1 1/4" galvanized roofing nail or minimum 15/16" crown x 1 1/4" leg 16-gauge galvanized staples spaced 3":3" (edge:field).
3. Tabulated bracing lengths are based on the following:
   a. Soil Class D
   b. Wall height = 10'
   c. 10 psf floor dead load
   d. 15 psf roof/ceiling dead load
   e. Braced wall line spacing ≤ 25'
4. Linear interpolation is permitted.
5. Where gypsum wallboard is not applied to the interior side of the wall assembly, bracing lengths shall be multiplied by a factor of 1.4.
6. NP = Not Permitted
7. Townhouses only

6.2.3 *DRYline TSX (Blue) Structural Sheathing CS-PF Portal Frame*

6.2.3.1 A *"DRYline TSX (Blue) Structural Sheathing CS-PF"* was tested and evaluated for equivalency to the IRC Method CS-PF (Continuously Sheathed Portal Frame) in accordance with IRC Section R602.10.6.4 and IRC Table R602.10.6.4.

6.2.3.2 IRC Section R602.10.5 establishes the contributing length of bracing of the CS-PF. IRC Table R602.10.5 shall be used to determine the equivalent bracing length for the DRYline TSX (Blue) Structural Sheathing CS-PF. The capacity of DRYline TSX (Blue) Structural Sheathing CS-PF exceeds the capacity of the IRC method CS-WSP and is, therefore, permitted to be substituted for an equivalent length of bracing.

Information contained in this report was developed using report holder's confidential intellectual property (IP) and trade secrets (TS), which is protected by Defend Trade Secrets Act 2016, © DrJ Engineering, LLC

6.2.3.3 The DRYline TSX (Blue) Structural Sheathing CS-PF is shown in **Figure 2**.

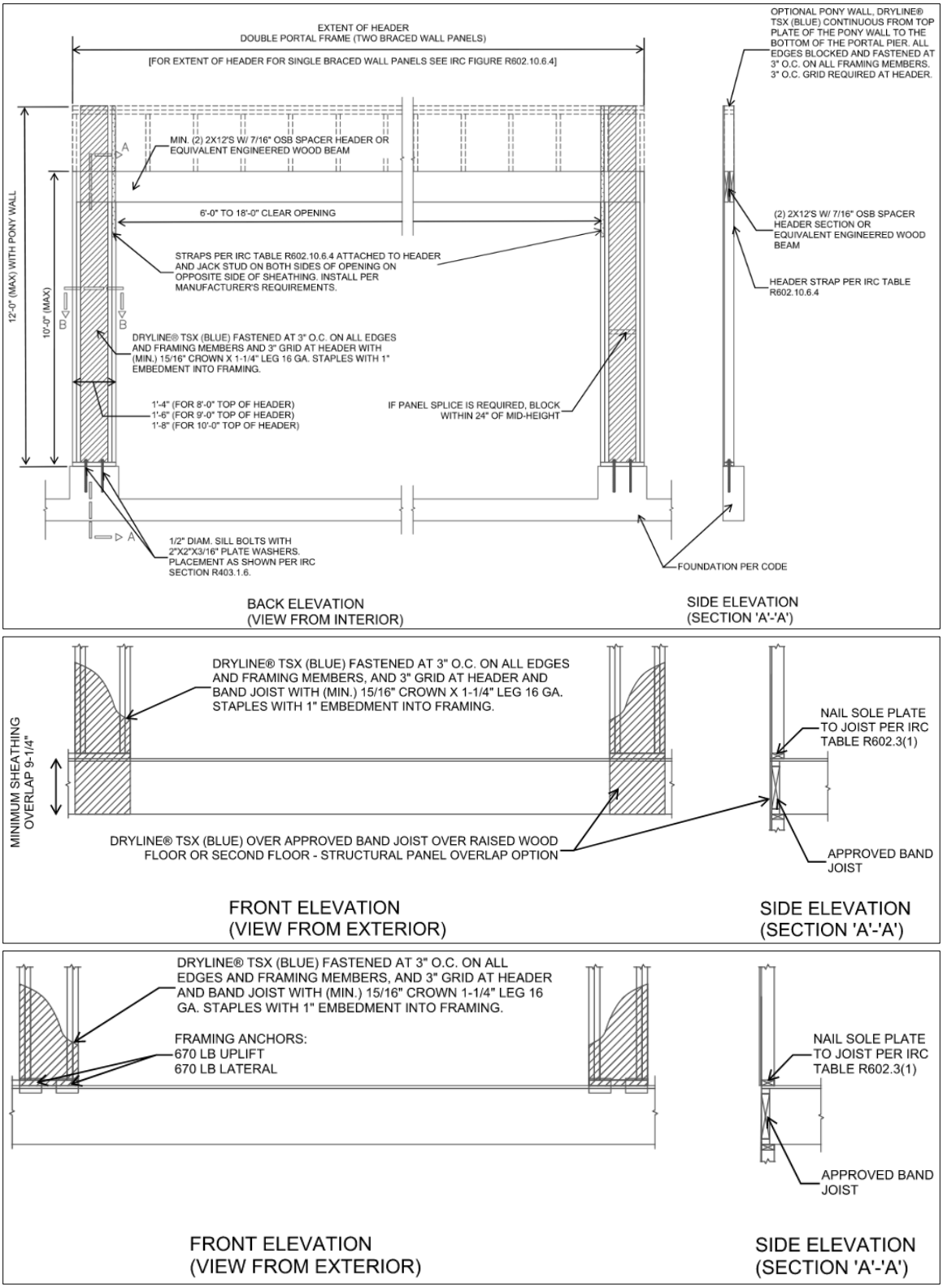

Figure 2. DRYline TSX (Blue) Structural Sheathing CS-PF

Information contained in this report was developed using report holder's confidential intellectual property (IP) and trade secrets (TS), which is protected by Defend Trade Secrets Act 2016, © DrJ Engineering, LLC

6.2.4 *DRYline TSX (Blue) Structural Sheathing Method PFH*

6.2.4.1 In accordance with the IRC Section R602.10.6.2, the PFH referenced in the IRC is permitted to be an equivalent replacement for a 4' length of Method WSP bracing.

6.2.4.2 Testing of the DRYline TSX (Blue) Structural Sheathing PFH assemblies was conducted and compared to testing of Method WSP braced wall panel assemblies using Oriented Strand Board (OSB) to determine whether equivalence could be achieved for the DRYline TSX PFH.

6.2.4.3 The portal frames were tested in accordance with ASTM E2126 testing procedures. Testing determined their lateral resistance within an identical braced wall line using Method WSP braced wall panels so that a direct performance comparison could be made between the two series of tests.

6.2.4.4 A comparison of the WSP braced wall lines and the DRYline TSX (Blue) Structural Sheathing 12" PFH and 24" PFH is shown in **Table 3**.

Table 3. Design Values for PFH Option 1 or Option 2[1-3]

Test Name	Sheathing Method	Option	Fastener Size and Spacing	Total Bracing Width (in)	Maximum Wall Height (ft)	ASD Allowable Design Value per Panel/Pier[4,5] (lbs)
IBC/IRC Benchmark	3/8" OSB, Isolated 4' x 8' Panels	N/A	2 3/8" x 0.113Ø Nails, 6:12 Spacing	96	Up to 10	700
12" PFH	DRYline TSX (Blue) Structural Sheathing	Option 1	See **Figure 3** to **Figure 6**	12	8	1,280
					10	960
12" PFH	DRYline TSX (Blue) Structural Sheathing	Option 2	See **Figure 7** to **Figure 9**	12	8	1,410
					10	1,060
24" PFH	DRYline TSX (Blue) Structural Sheathing	Option 1 or 2	See **Figure 3** to **Figure 6** or **Figure 7** to **Figure 9**	24	8	2,560
					10	1,920

SI: 1 in = 25.4 mm, 1 lb. = 4.45 N

1. Capacity derived from multiple full-scale tests, showing the capacity of OSB sheathing in buildings constructed in accordance with the minimum requirements of the IRC.
2. The PFH bracing type in the IRC/IBC is defined as equivalent to a 4' BWP using 3/8" WSP. Equivalent capacity is based on comparison testing of the PFH and 3/8" OSB as compared to the published capacities as defined in the IBC and SDPWS.
3. For seismic design, reduce capacities by a factor of 1.4.
4. Interpolation between the wall heights and pier widths for the 12" PFH and 24" PFH is permitted.
5. 10' high wall design values are provided that use a seventy-five percent (75%) factor to reduce the 8' high wall design values generated by test data.

6.2.4.5 The test data and subsequent engineering analysis provides confirmation that the performance of the DRYline TSX (Blue) Structural Sheathing 12" PFH and 24" PFH provide comparable equivalence to the Method WSP braced wall panels.

6.2.4.6 As detailed in **Figure 3** through **Figure 6** or in **Figure 7** through **Figure 9**, the maximum allowable compressive strength of the DRYline TSX (Blue) 12" to 24" PFH is 11,156 lbs. per pier. Additional compressive capacity may be engineered into each pier.

Information contained in this report was developed using report holder's confidential intellectual property (IP) and trade secrets (TS), which is protected by Defend Trade Secrets Act 2016, © DrJ Engineering, LLC

6.2.4.7 There are two construction options for the PFH with DRYline TSX (Blue) Structural Sheathing:

6.2.4.7.1 *PFH Assembly – Option 1*

6.2.4.7.1.1 The DRYline TSX (Blue) Structural Sheathing Option 1, 12" PFH and 24" PFH is constructed in accordance with **Figure 3** through **Figure 6**.

6.2.4.7.1.2 In PFH Assembly Option 1, the piers are made up of $^{7}/_{16}$" OSB sandwiched between nominal 2 x 4 studs installed flatwise, with additional 2 x 4 studs framing the outside corner (see **Figure 6**).

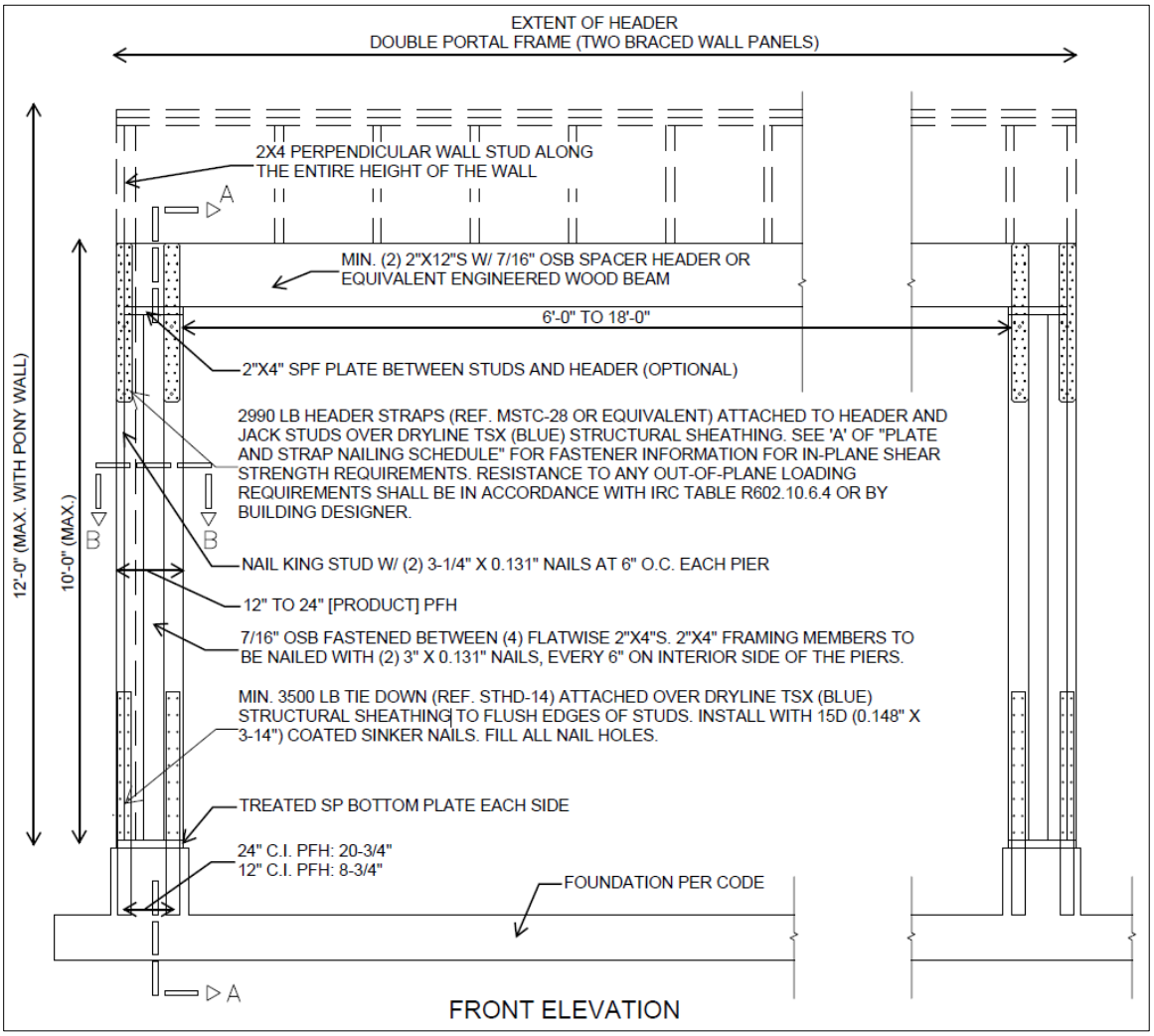

Figure 3. Construction Details of DRYLine TSX (Blue) 12" to 24" PFH – Option 1

Information contained in this report was developed using report holder's confidential intellectual property (IP) and trade secrets (TS), which is protected by Defend Trade Secrets Act 2016, © DrJ Engineering, LLC

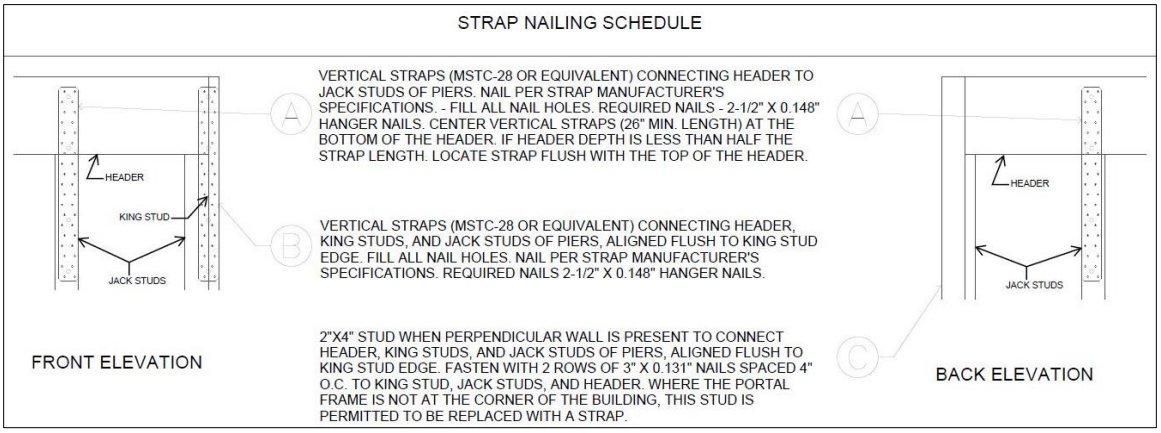

Figure 4. Header Connection Detail - Option 1

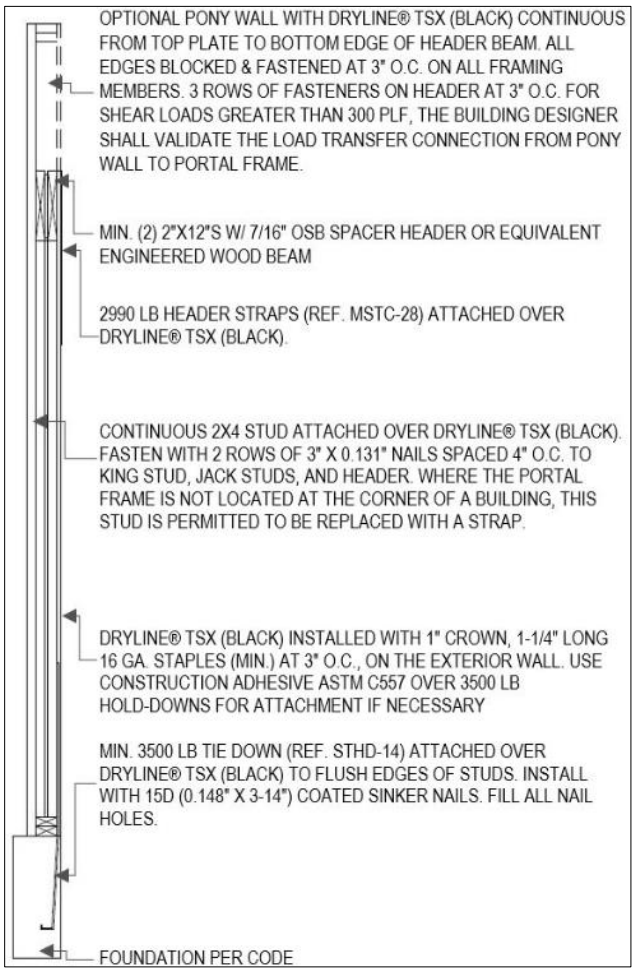

Figure 5. PFH Option 1 Section A-A

Information contained in this report was developed using report holder's confidential intellectual property (IP) and trade secrets (TS), which is protected by Defend Trade Secrets Act 2016, © DrJ Engineering, LLC

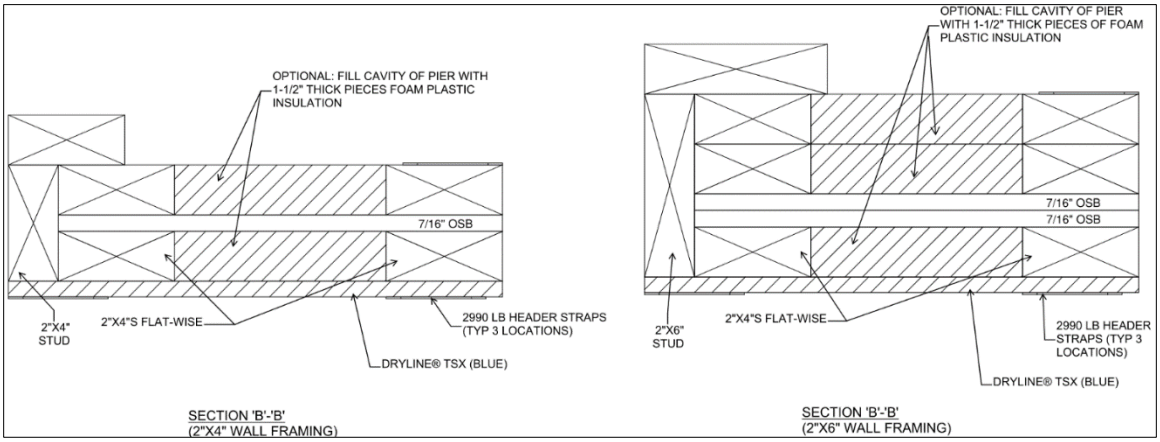

Figure 6. PFH Option 1 Section B-B

Information contained in this report was developed using report holder's confidential intellectual property (IP) and trade secrets (TS), which is protected by Defend Trade Secrets Act 2016, © DrJ Engineering, LLC

6.2.4.7.2 *PFH Assembly – Option 2*

6.2.4.7.2.1 The DRYline TSX (Blue) Structural Sheathing Option 2, 12" PFH and 24" PFH is constructed in accordance with **Figure 7** through **Figure 9**.

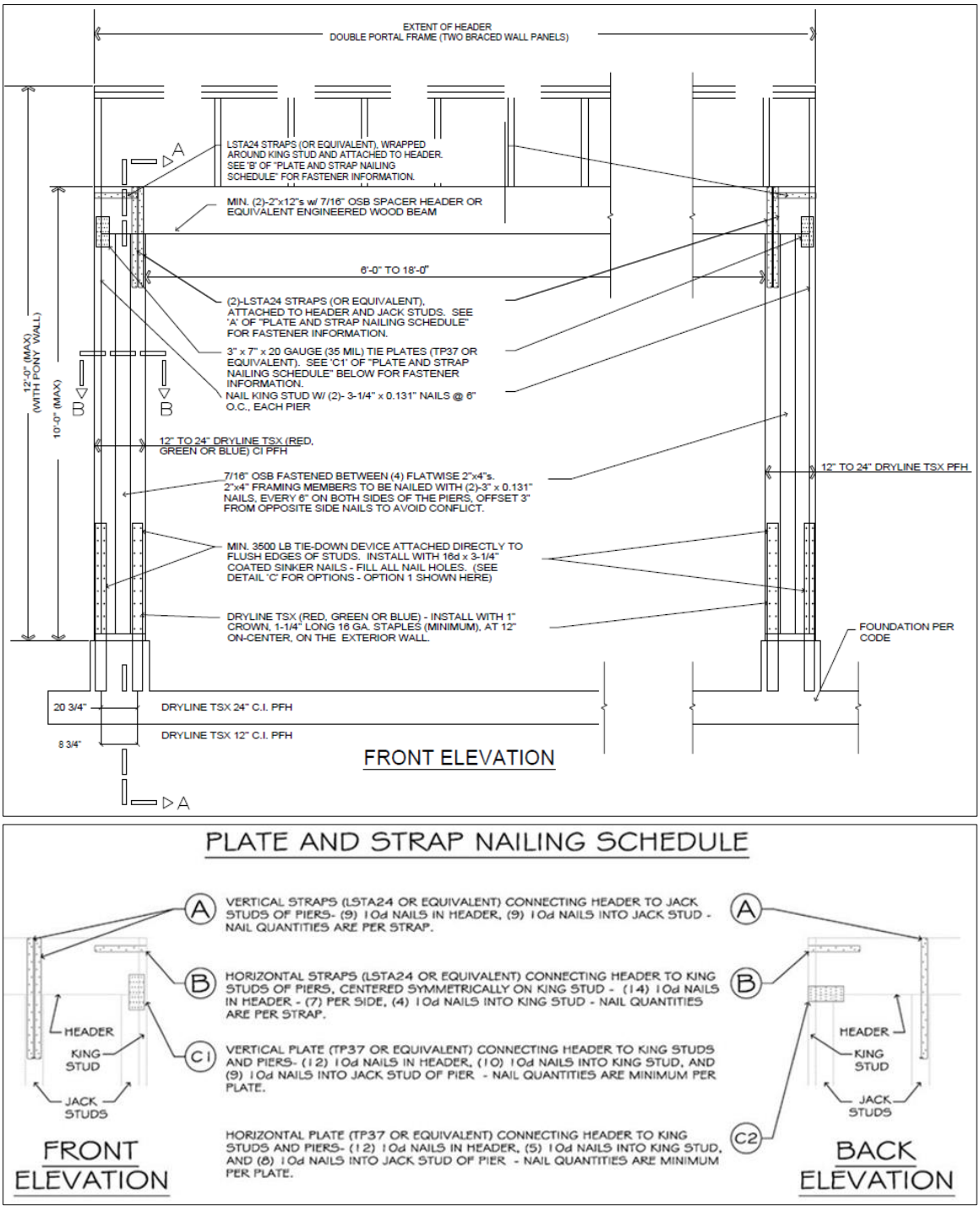

Figure 7. Construction Details of DRYline TSX (Blue) 12" to 24" PFH – Option 2

Information contained in this report was developed using report holder's confidential intellectual property (IP) and trade secrets (TS), which is protected by Defend Trade Secrets Act 2016, © DrJ Engineering, LLC

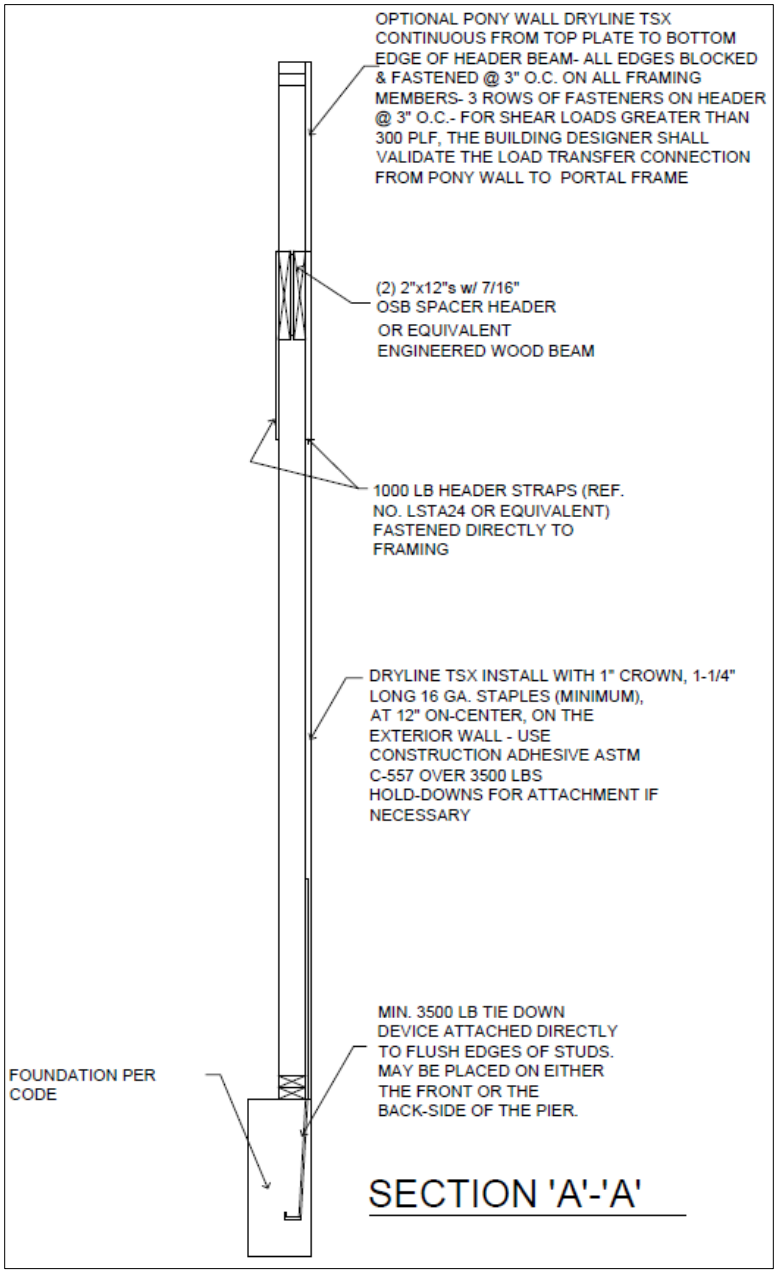

Figure 8. PFH Option 2 Section A-A

Information contained in this report was developed using report holder's confidential intellectual property (IP) and trade secrets (TS), which is protected by Defend Trade Secrets Act 2016, © DrJ Engineering, LLC

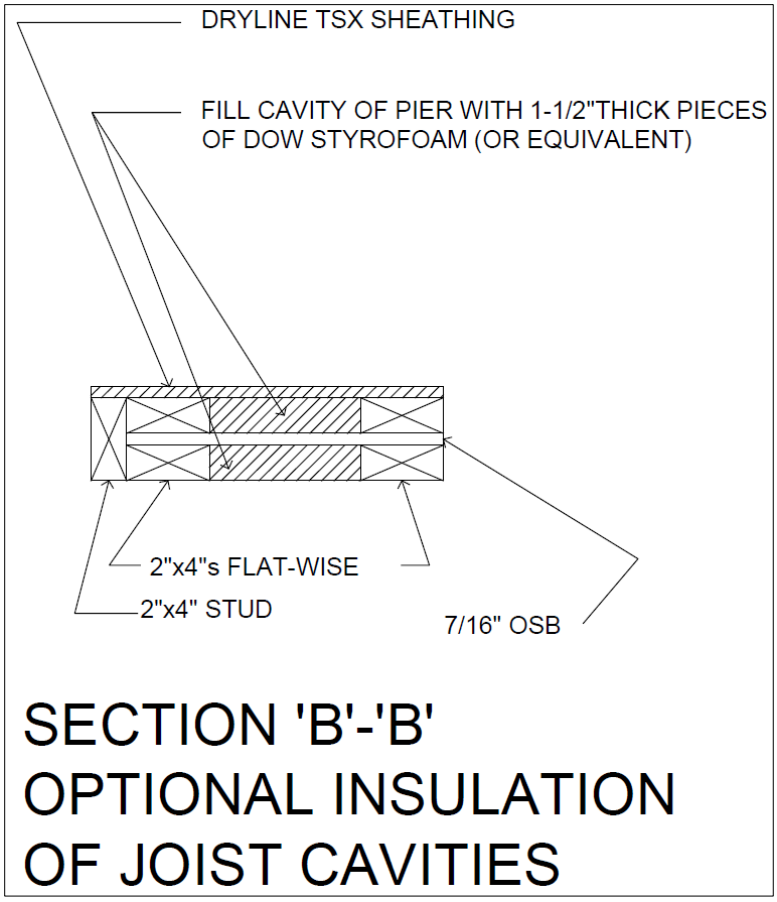

Figure 9. PFH Option 2 Section B-B

6.2.5 *Alternative Prescriptive IRC Bracing Applications*

6.2.5.1 As an alternative to **Section 6.2.2**, the following provisions are permitted:

6.2.5.1.1 DRYline TSX (Blue) Structural Sheathing may be used on braced wall lines as an equivalent alternative to Method WSP of the IRC, when installed in accordance with IRC Section R602.10 and this report.

6.2.5.1.2 DRYline TSX (Blue) Structural Sheathing may be used to brace walls of buildings as an alternative to the Continuous Wall Bracing provisions of IRC Section R602.10.4.

6.2.5.1.3 Required braced wall panel lengths for DRYline TSX (Blue) Structural Sheathing shall be as determined by the equivalency factor shown in **Table 4**, IRC Table R602.10.3(1), and IRC Table R602.10.3(2), including all footnotes.

6.2.5.1.3.1 Bracing lengths in these tables for Method WSP or CS-WSP shall be multiplied by the equivalency factor listed in **Table 4**.

Information contained in this report was developed using report holder's confidential intellectual property (IP) and trade secrets (TS), which is protected by Defend Trade Secrets Act 2016, © DrJ Engineering, LLC

Table 4. DRYline TSX (Blue) Structural Sheathing Braced Wall Line Length Equivalency Factors Based on Equivalency Testing for Use with the IRC[2-5]

Structural Sheathing	Maximum Stud Spacing (in)	Fastener[1]	Fastener Spacing	Wind
				SPF Framing
				Equivalency Factors to IRC WSP or CS-WSP
DRYline TSX (Blue) Structural Sheathing	24 o.c.	$^{15}/_{16}$" Crown x $1^{1}/_{4}$" Leg Galvanized Staples or 0.120" x $1^{1}/_{4}$" Galvanized Roofing Nail	3:3	0.93

SI: 1 in = 25.4 mm

1. Fastener heads shall be installed flush to the surface of the sheathing. Staples shall be a minimum 16-gauge and shall be installed with the crowns parallel to the length of the framing member.
2. Multiply the bracing lengths in IRC Table R602.10.3(1) and IRC Table R602.10.3(2) Method WSP or CS-WSP (continuous sheathing) as applicable, including all footnotes, by the factors shown here to establish the required bracing length.
3. Gypsum wallboard fastened with a minimum 5d cooler nails or $1^{1}/_{4}$" #6 types W or S screws spaced 8" o.c. at panel edges and 8" o.c. in the field of the panels.
4. Where gypsum wallboard is not applied to the interior side of the wall assembly, bracing lengths shall be multiplied by a factor of 1.4.
5. Valid for single top plate (advanced framing method) wall installations or double top plate wall installations.

6.2.5.1.3.2 These braced wall line length equivalency factors are based on equivalency testing and are used to comply with Method WSP and CS-WSP of the IRC.

6.2.5.1.3.3 DRYline TSX (Blue) Structural Sheathing tested equivalency factors in **Table 4** allow the user to determine the length of bracing required, by multiplying the factor from **Table 4** by the length shown in the WSP or CS columns in IRC Table R602.10.3(1), as modified by all applicable factors in IRC Table R602.10.3(2).

6.2.5.1.4 All IRC prescriptive bracing minimums, spacing requirements, and rules must also be met.

6.2.6 *Prescriptive IBC Conventional Light-Frame Wood Construction*

6.2.6.1 DRYline TSX (Blue) Structural Sheathing may be used to brace exterior walls of buildings as an equivalent alternative to Method WSP of the IBC when installed with $^{1}/_{2}$" (13 mm) gypsum fastened with a minimum 5d cooler nail or #6 Type W or S screw spaced a maximum of 16" (406 mm) o.c. at panel edges and 16" o.c. in the field. Bracing shall be in accordance with the conventional light-frame construction method of IBC Section 2308.10[27] and this report.

6.2.7 *Performance-Based Wood-Framed Construction*

6.2.7.1 DRYline TSX (Blue) Structural Sheathing panels used in wall assemblies designed as shear walls are permitted to be designed in accordance with the methodology used in SDPWS for WSP using the capacities shown in **Table 5** through **Table 7**.

6.2.7.2 DRYline TSX (Blue) Structural Sheathing panel shear walls are permitted to resist horizontal wind load forces using the allowable shear loads (in pounds per linear foot) set forth in **Table 5**.

6.2.7.3 DRYline TSX (Blue) Structural Sheathing shear walls that require seismic design in accordance with IBC Section 1613 shall use the seismic allowable unit shear capacities set forth in **Table 6**.

6.2.7.3.1 The response modification coefficient, R, system overstrength factor, Ω_0, and deflection amplification factor, C_d, indicated in **Table 6** shall be used to determine the base shear, element design forces, and design story drift in accordance with ASCE 7 Chapter 12 and Section 14.5.

Information contained in this report was developed using report holder's confidential intellectual property (IP) and trade secrets (TS), which is protected by Defend Trade Secrets Act 2016, © DrJ Engineering, LLC

6.2.7.4 DRYline TSX (Blue) Structural Sheathing panels are permitted to resist transverse wind load forces using the allowable transverse loads (in pounds per square foot) set forth in **Table 7** and the wind speeds shown in **Table 8**.

6.2.7.5 DRYline TSX (Blue) Structural Sheathing panels are permitted to resist uplift load forces using the allowable uplift loads (in pounds per linear foot) set forth in **Table 9**.

Table 5. Allowable Unit Shear Design Values for DRYline TSX (Blue) Structural Sheathing – Wind

Structural Sheathing	Fastener[1]	Joint Treatment[3]	Maximum Stud Spacing (in)	Gypsum Wallboard[2] (GWB)	GWB Fastener Spacing[4] (edge/field)	Allowable Unit Shear Capacity (plf)
DRYline TSX (Blue) Structural Sheathing	15/16" Crown x 1 1/4" Leg Galvanized Staples or 0.120" x 1 1/4" Galvanized Roofing Nail	Butted or Lapped	24 o.c.	1/2" GWB	4/16	480
					8/16	420
					16/16	395
			16 o.c.	1/2" GWB	4/16	525
					8/16	455
					16/16	430
		Butted	24 o.c.	1/2" GWB	8/8	435
				No GWB	-	355
			16 o.c.	1/2" GWB	8/8	475
				No GWB	-	385
		Lapped	24 o.c.	1/2" GWB	8/8	500
				No GWB	-	375
			16 o.c.	1/2" GWB	8/8	500
				1/2" GWB	12/12	470
				No GWB	-	410

SI: 1 in = 25.4 mm, 1 lb/ft = 0.0146 kN/m

1. DRYline TSX (Blue) Structural Sheathing attached with a minimum 16-gauge, 15/16" crown x 1 1/4" leg staples or 0.120" x 1 1/4" roofing nail. Fasteners are to be spaced a maximum of 3" o.c. at the edges and 3" o.c. in the field with a minimum edge distance of 3/8".
2. Gypsum attached with minimum 5d cooler nail or #6 type W or S screws 1 1/4" long. Fastener spacing shall be as required above.
3. DRYline TSX (Blue) Structural Sheathing joints shall be butted at framing members and a single row of fasteners must be applied to each panel edge into the stud below. Alternately, joints may be lapped 3/4" with a single row of fasteners along each framing member.
4. Linear interpolation between fastening patterns is permitted.

Information contained in this report was developed using report holder's confidential intellectual property (IP) and trade secrets (TS), which is protected by Defend Trade Secrets Act 2016, © DrJ Engineering, LLC

Table 6. DRYline TSX (Blue) Structural Sheathing Allowable Stress Design (ASD) Capacity and Seismic Design Coefficients (Seismic)[1]

Seismic Force-Resisting System	Maximum Stud Spacing (in)	GWB[7]	Seismic Allowable Unit Shear Capacity[2] (plf)	Apparent Shear Stiffness, G_a (kips/in)	Response Modification Factor[3], R	System Over-strength Factor,[4] Ω_0	Deflection Amplification Coefficient,[5] C_d	Structural System Limitations and Building Height Limit[6] (ft)				
								SDC				
								B	C	D	E	F
Light-Frame (Wood) Walls Sheathed with DRYline TSX (Blue) Structural Sheathing	24 o.c.	1/2" GWB	310	9.0	6.5	3	4	NL	NL	65	65	65
		No GWB	285	14.5	6.5	3	4	NL	NL	65	65	65

SI: 1 in = 25.4 mm, 1 lb/ft = 0.0146 kN/m

1. All seismic design coefficients follow the equivalency procedures as defined in **Section 8** of this report.
2. Allowable unit shear capacity is determined in accordance with ASTM D7989.
3. Response modification coefficient, R, for use throughout ASCE 7. *Note:* R reduces forces to a strength level, not an allowable stress level.
4. The tabulated value of the overstrength factor, Ω_0, is permitted to be reduced by subtracting one-half (0.5) for structures with flexible diaphragms.
5. Deflection amplification factor, C_d, for use with ASCE 7 Sections 12.8.6, 12.8.7, and 12.9.2.
6. NL = Not Limited. Heights are measured from the base of the structure as defined in ASCE 7 Section 11.2.
7. Gypsum attached with minimum #6 type W or S screws 1 1/4" long spaced 16" o.c. at panel edges and in the field. Maximum stud spacing is 24" o.c.

Table 7. Allowable Load Capacities (psf) for DRYline TSX (Blue) Structural Sheathing Resisting Out-of-Plane Wind Loads[1,2]

Structural Sheathing	Transverse Wind Load Resistance		
	Allowable Design Value (psf)	Maximum Stud Spacing	Fastener Schedule
DRYline TSX (Blue) Structural Sheathing	95	24 o.c.	15/16" Crown x 1 1/4" Leg 16-gauge Galvanized Staples; 3" o.c. at the perimeter, 3" o.c. in the Field; Staple Crowns to be Installed Parallel to Grain

SI: 1 in = 25.4 mm, 1 psf = 0.0479 kN/m2

1. The ASD allowable uniform load capacities to be used for wind design are determined in accordance with SDPWS Section 3.2.1.
2. Design wind load shall be in accordance with IBC Section 1609.1.1.

Information contained in this report was developed using report holder's confidential intellectual property (IP) and trade secrets (TS), which is protected by Defend Trade Secrets Act 2016, © DrJ Engineering, LLC

Table 8. Basic Wind Speed (mph) for DRYline TSX (Blue) Structural Sheathing Used in Exterior Wall Covering Assemblies[1,2]

Structural Sheathing	Components and Cladding Wind Speed (mph)	
	Basic Wind Speed, V_{ult}	Allowable Stress Design Wind Speed, V_{asd}
DRYline TSX (Blue) Structural Sheathing	200	155

SI: 1 in = 25.4 mm, 1 mph = 1.61 km/h

1. Allowable wind speeds are based on the following: Mean roof height 30', Exposure B, 10 sq. ft. effective wind area. See the applicable building code for any adjustment need for specific building location and configuration.
2. Studs shall be spaced 24" o.c. maximum.

Table 9. Uplift Performance of DRYline TSX (Blue) Structural Sheathing[1,2,3,4,5]

Structural Sheathing	Allowable Unit Uplift Capacity (plf)	Maximum Stud Spacing (in)	Fastener Schedule
DRYline TSX (Blue) Structural Sheathing	380	16 o.c.	$^{15}/_{16}$" crown, $1^{1}/_{4}$" leg 16-gauge galvanized staples, 3" o.c. to perimeter/field; Staple crowns to be installed parallel to grain

SI: 1 in = 25.4 mm, 1 lb/ft = 0.0146 kN/m

1. The capacities shown are for the purpose of providing information on the hold-down capacity of the sheathing to the bottom plate connection independent of lateral loading. Where combined shear and uplift loading is needed, consult a professional engineer.
2. Tabulated capacity was established from testing in which the studs were attached to plates with three 3" x 0.131" nails.
3. Staple crowns to be installed parallel to length of framing members.
4. Wood framing shall have a published minimum Specific Gravity (SG) of 0.42.
5. Fasteners shall be installed with the head/crown in contact with the face of the board. Fastener edge distance shall be a minimum of $^{3}/_{8}$" on all sides of the board.

6.3 *Water-Resistive Barrier*

6.3.1 DRYline TSX (Blue) Structural Sheathing may be used as a WRB as prescribed in IBC Section 1403.2 and IRC Section R703.2 when installed on exterior walls as described in this section.

6.3.2 DRYline TSX (Blue) Structural Sheathing shall be installed in the vertical or horizontal orientation with board joints placed directly over exterior framing (e.g., studs, plates, or blocking) spaced a maximum of 24" (610 mm) o.c. The fasteners used to attach the board shall be installed in accordance with **Section 9**.

6.3.3 All seams and joints between boards shall be overlapped $^{3}/_{4}$" (19 mm) or covered by minimum 1.5" (38 mm) wide DRYline® Sheathing Tape or equivalent.

6.3.4 DRYline TSX (Blue) Structural Sheathing may be installed as a WRB in a non-structural capacity with the fasteners used to attach the board installed in accordance with **Section 6.5**. All butt joints between sheathing panels shall be sealed with minimum 1.5" (38 mm) wide DRYline Sheathing Tape or equivalent.

6.3.5 Flashing must be installed at all sheathing penetrations and shall comply with all applicable code sections.

6.3.6 Where DRYline TSX (Blue) Structural Sheathing is used intermittently along a braced wall line, DRYline TSX (Green) Structural Sheathing may be used as infill between the DRYline TSX (Blue) Structural Sheathing panels. In this application, the WRB is maintained, provided all seams and joints between boards are overlapped $^{3}/_{4}$" (19 mm) or covered by an approved construction tape.

6.3.7 DRYline TSX (Blue) Structural Sheathing has water-resistance properties as shown in **Table 10**.

Information contained in this report was developed using report holder's confidential intellectual property (IP) and trade secrets (TS), which is protected by Defend Trade Secrets Act 2016, © DrJ Engineering, LLC

Table 10. DRYline TSX (Blue) Structural Sheathing Water-Resistance Properties

Property	Test Method	Value	Classification
Water Vapor Transmission	ASTM E96	< 0.3 Perm	Class II
SI: 1 perm = 5.72 x 10^{-8} g/(Pa·s·m^2)			

6.4 *Air Barrier*

6.4.1 DRYline TSX (Blue) Structural Sheathing was evaluated for air permeability in accordance with ASTM E2178.

6.4.2 DRYline TSX (Blue) Structural Sheathing meets the requirements of IECC Section C402.6.2.3.1[28] for use as an air barrier material when installed in accordance with the manufacturer installation instructions and this report.

6.4.2.1 DRYline TSX (Blue) Structural Sheathing may be used as prescribed in IRC Section R806.5, IRC Section N1102.5,[29] IECC Section C402.6,[30] and IECC Section R402.5.[31]

6.4.3 When used as part of a continuous air barrier assembly in a structural application, DRYline TSX (Blue) Structural Sheathing shall be installed in accordance with **Section 6**. When installed as part of a continuous air barrier assembly in a non-structural application, the fasteners used to attach the board may be installed in accordance with **Section 6.5**.

6.4.3.1 Additionally, all sheathing panel edges at the top and bottom of the wall assemblies and all joints between sheathing panels shall be sealed in accordance with IRC Section N1102.5.1.1,[32] IECC Section R402.5.1.1,[33] and IECC Section C402.6.1.

6.4.4 DRYline TSX (Blue) Structural Sheathing has the air permeability as shown in **Table 11**.

Table 11. Air Barrier Material Properties[1]

Product	Air Permeability (L/s·M^2)
DRYline TSX (Blue) Structural Sheathing	< 0.02
1. Tested in accordance with ASTM E2178.	

6.5 *Non-Structural Applications*

6.5.1 Where other means of wall bracing are provided, or are not required, and an approved exterior wall covering capable of separately resisting loads perpendicular to the face of the walls is installed over the sheathing, DRYline TSX (Blue) Structural Sheathing may be used.

6.5.2 The sheathing panels are applied to wall framing with minimum 0.120" x $1^1/_4$" (3 mm x 32 mm) galvanized roofing nails or 16-gauge galvanized staples having a $^{15}/_{16}$" (24 mm) crown and $1^1/_4$" (32 mm) leg lengths.

6.5.3 Fastener spacing shall be a maximum of 6" (152 mm) at the edges and 12" (305 mm) on intermediate members.

6.5.3.1 Stud spacing shall be a maximum of 24" (610 mm) o.c.

6.5.3.2 Minimum fastener penetration into the framing members is $^3/_4$" (19 mm).

6.6 Alternative techniques shall be permitted in accordance with accepted engineering practice and experience. These provisions for the use of alternative materials, designs, and methods of construction are not intended to prevent the installation of any material or to prohibit any design or method of construction not specifically prescribed herein. This includes, but is not limited to, the following areas of engineering: mechanics of materials, structures, building science, and fire science.

Information contained in this report was developed using report holder's confidential intellectual property (IP) and trade secrets (TS), which is protected by Defend Trade Secrets Act 2016, © DrJ Engineering, LLC

7 Certified Performance[34]

7.1 All construction methods shall conform to accepted engineering practices to ensure durable, livable, and safe construction and shall demonstrate acceptable workmanship reflecting journeyman quality of work of the various trades.[35]

7.2 The strength and rigidity of the component parts and/or the integrated structure shall be determined by engineering analysis or by suitable load tests to simulate the actual loads and conditions of application that occur.[36]

8 Regulatory Evaluation and Accepted Engineering Practice

8.1 DRYline TSX (Blue) Structural Sheathings comply with the following legislatively adopted regulations and/or accepted engineering practice for the following reasons:

8.1.1 Structural performance under lateral load conditions (wind and seismic) for use as an alternative to the IRC Intermittent Wall Bracing provisions of IRC Section R602.10 Method WSP (Wood Structural Panel).

8.1.2 Structural performance under lateral load conditions for use as an alternative to the IRC Continuous Wall Bracing provisions of IRC Section R602.10.4 Methods CS-WSP (Continuously Sheathed Wood Structural Panel) and CS-PF (Continuously Sheathed Portal Frame).

8.1.3 Structural performance under lateral load conditions for use as an alternative to the IRC Continuous Wall Bracing provisions of IRC Section R602.10.6.2 Method PFH (Portal Frame with Hold-downs).

8.1.4 Structural performance under lateral load conditions for use as an alternative to the IBC Conventional Wall Bracing provisions of IBC Section 2308.10[37] Method WSP for Type V construction.

8.1.5 Structural performance under lateral load conditions for both wind and seismic loading for use with the IBC performance-based provisions of IBC Section 2306.1 and IBC Section 2306.3 for light-frame wood wall assemblies.

8.1.5.1 **Table 6** provides Seismic Design Coefficients (SDC) that conform to the requirements in ASCE/SEI 7 Section 12.2.1 and Table 12.2-1 for design of wall assemblies in buildings that require seismic design in accordance with ASCE/SEI 7 (i.e., all seismic design categories).

8.1.5.2 The basis for equivalency testing is outlined in Section 12.2.1.1 of ASCE/SEI 7:

> Use of seismic force-resisting systems not contained in Table 12.2-1 shall be permitted contingent on submittal to and approval by the Authority Having Jurisdiction and independent structural design review of an accompanying set of design criteria and substantiating analytical and test data. The design criteria shall specify any limitations on system use, including Seismic Design Category and height; required procedures for designing the system's components and connections; required detailing; and the values of the response modification coefficient, R; overstrength factor Ω_0; and deflection amplification factor, C_d.

8.1.5.3 The SDC evaluation uses the approach found in documentation entitled, *"Establishing Seismic Equivalency for Proprietary Prefabricated Shear Panels,"* using code-defined accepted engineering procedures, experience, and technical judgement.

8.1.6 Structural performance under lateral load conditions for use as an alternative to SDPWS Section 4.3 Wood Frame Shear Walls.

8.1.7 Resistance to transverse loads for wall assemblies used in light-frame wood construction in accordance with IBC Section 1609.1.1 and IRC Section R301.2.1.

8.1.8 Resistance to uplift loads for wall assemblies used in light-frame wood construction in accordance with IBC Section 1609.1.1 and IRC Section R301.2.1.

8.1.9 Performance for use as a WRB in accordance with IBC Section 1403.2 and IRC Section R703.2.

Information contained in this report was developed using report holder's confidential intellectual property (IP) and trade secrets (TS), which is protected by Defend Trade Secrets Act 2016, © DrJ Engineering, LLC

8.1.10 Performance for use as an air barrier material in accordance with IECC Section C402.6.2.3.1.[38]

8.2 For use of DRYline TSX (Blue) Structural Sheathing in draftstop applications, see DrJ Report Number 1407-10.

8.3 Any building code, regulation, and/or accepted engineering evaluations (e.g., research reports, duly authenticated reports, etc.) that are conducted for this Listing were performed by DrJ, which is an ISO/IEC 17065 accredited certification body and a professional engineering company operated by RDP or approved sources. DrJ is qualified[39] to practice product and regulatory compliance services within its scope of accreditation and engineering expertise,[40] respectively.

8.4 Engineering evaluations are conducted with DrJ's ANAB accredited ICS code scope of expertise, which is also its areas of professional engineering competence.

9 Installation

9.1 Installation shall comply with the approved construction documents, the manufacturer installation instructions, this report, and the applicable building code.

9.2 In the event of a conflict between the manufacturer installation instructions and this report, contact the manufacturer for counsel on the proper installation method.

9.3 *Installation Procedure*

9.3.1 *General*

9.3.1.1 DRYline TSX (Blue) Structural Sheathing shall be installed in accordance with the manufacturer published installation instructions and this report (see **Figure 10** and **Figure 11**).

9.3.1.2 A copy of the manufacturer published installation instructions shall be available at all times on the jobsite during installation.

9.3.1.3 Where required, gypsum wallboard shall be a minimum $^{1}/_{2}$" (13 mm) thickness.

9.3.2 *Orientation*

9.3.2.1 DRYline TSX (Blue) Structural Sheathing must be installed vertically or horizontally with all panel edges supported by framing or blocking.

9.3.2.2 DRYline TSX (Blue) Structural Sheathing must be installed over studs, with framing that has a nominal thickness of not less than 2" (51 mm) and spaced a maximum of 24" (610 mm) o.c.

9.3.3 *Fastener Type*

9.3.3.1 *DRYline TSX (Blue) Structural Sheathing*

9.3.3.1.1 Minimum $^{15}/_{16}$" crown x $1^{1}/_{4}$" leg, 16-gauge galvanized staples installed with the underside of the crown flush with the surface of the sheathing.

9.3.3.1.2 Minimum 0.120" x $1^{1}/_{4}$" (3 mm x 32 mm) galvanized roofing nail installed with the underside of the head flush with the surface of the sheathing.

9.3.3.2 *Gypsum Wallboard*

9.3.3.2.1 Where required, gypsum wallboard shall be installed with a minimum:

9.3.3.2.1.1 #6 x $1^{1}/_{4}$" (32 mm) Type W or S screws

9.3.3.2.1.2 5d cooler nails

9.3.4 *Fastener Spacing*

9.3.4.1 *DRYline TSX (Blue) Structural Sheathing*

9.3.4.1.1 Maximum of 3" o.c. (76 mm) along the edge and 3" o.c. in the field.

9.3.4.2 *Gypsum Wallboard*

Information contained in this report was developed using report holder's confidential intellectual property (IP) and trade secrets (TS), which is protected by Defend Trade Secrets Act 2016, © DrJ Engineering, LLC

9.3.4.2.1 For IRC and IBC prescriptive applications, gypsum fasteners shall be spaced 16" (406 mm) o.c. at panel edges and 8" o.c. at intermediate framing. For engineered design, see **Table 5**.

9.3.5 *Fastener Edge Distance*

9.3.5.1 Fastener edge distance is a minimum of $^{3}/_{8}$" (10 mm) for both DRYline TSX (Blue) Structural Sheathing and gypsum.

9.3.5.2 Always fasten staples parallel to the framing member.

9.3.6 *Treatment of Joints*

9.3.6.1 DRYline TSX (Blue) Structural Sheathing joints shall be lapped $^{3}/_{4}$" (19 mm) with a single row of fasteners along each framing member.

9.3.6.1.1 Alternately, joints may be butted at framing members, and a single row of fasteners must be applied to each panel edge into the stud below.

9.3.6.2 Do not tack DRYline TSX (Blue) Structural Sheathing to framing, but fasten each panel completely once fastening begins.

9.3.7 *Window Treatments*

9.3.7.1 If windows are made to accommodate traditional $^{1}/_{2}$" (13 mm) sheathing materials, order windows with adjustable nailing fins from the supplier. Door brick moldings may be planed or routed $^{3}/_{8}$" (10 mm), in order to accommodate the different sheathing thickness, either at the jobsite or by the millwork supplier.

9.3.7.2 DRYline TSX (Blue) Structural Sheathing must be installed with appropriate flashing and counter flashing in conformance with accepted building standards and in compliance with local building codes and the flashing manufacturer installation instructions.

Information contained in this report was developed using report holder's confidential intellectual property (IP) and trade secrets (TS), which is protected by Defend Trade Secrets Act 2016, © DrJ Engineering, LLC

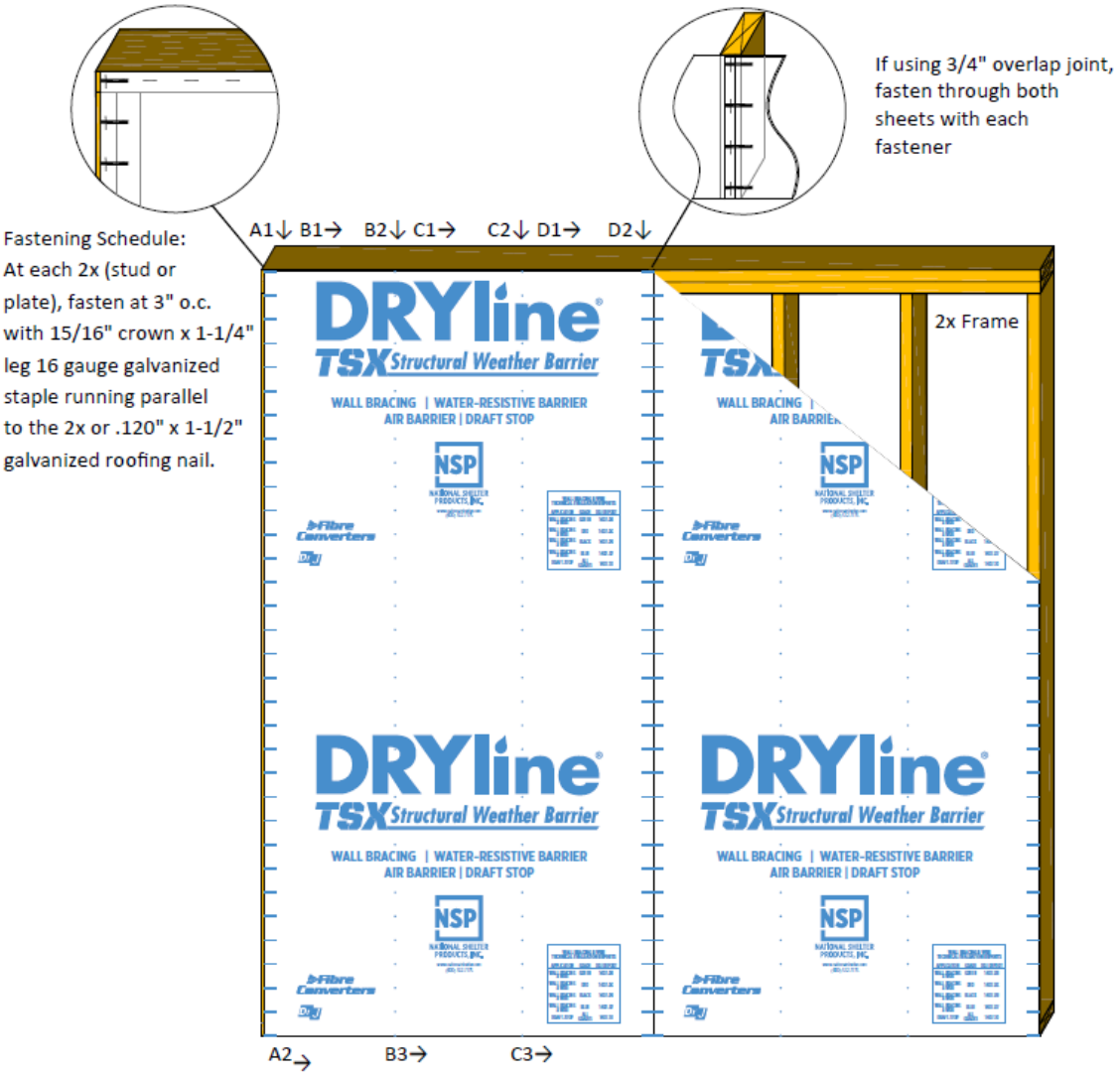

Fastening Schedule:

Step A – (A1) starting in the top left corner, fasten down the left side of the sheet and then (A2) across the bottom stopping at the next vertical 2x.

Step B – (B1) starting in the top left corner, fasten across the top of the sheet stopping at the next vertical 2x, then (B2) down that 2x starting at the top, and then (B3) across the bottom stopping at the next vertical 2x.

Step C – Repeat step B.

Step D – (D1) starting at the previous vertical 2x, fasten across the top of the sheet stopping at the next vertical 2x. If the last sheet or a butt joint, (D2) fasten starting at the top of the last 2x. If installing another sheet with an overlapping joint, overlap the next sheet and repeat starting with Step A, fastening through both sheets with each fastener.

Figure 10. Installation Instructions

Information contained in this report was developed using report holder's confidential intellectual property (IP) and trade secrets (TS), which is protected by Defend Trade Secrets Act 2016, © DrJ Engineering, LLC

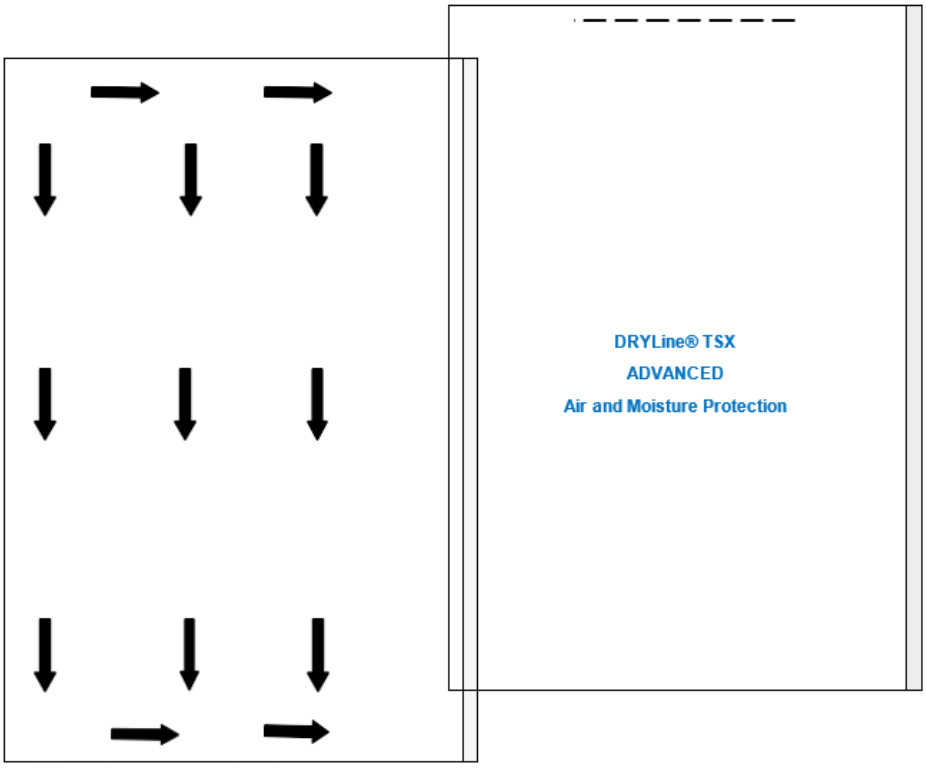

DRYline TSX ADVANCED AIR AND MOISTURE PROTECTION (AMP Blue) Installation Instructions

(USE REPORT SPECIFIED FASTENER SCHEDULE)

Steps:

1. From the top un-taped corner, fasten horizontally leaving the last 3" unfastened.
2. Again, from the top un-taped corner, fasten downward toward the bottom corner.
3. Repeat the same downward fastening along each vertical framing member leaving the framing member nearest the taped edge unfastened.
4. Fasten along the bottom plate stopping 3" from the taped edge.
5. Position the next panel adjacent to the first with its un-taped vertical edge lapped 3/4" over the first panel's taped edge.
6. Fasten the new panel along the top plate away from the vertical lapped seam.
7. From the top, peel-away the tape release liner at the lapped seam (always grasp the release liner dry edge, taking care to avoid damaging the DRYline TSX ADVANCED AMP protective coating).
8. Press the seam together by smoothing it with hand pressure or a roller.
9. Fasten downward along the lapped and taped seam.
10. Repeat Steps 3-8 with each successive panel.

Figure 11. DRYline TSX AMP (Blue) Installation Instructions

10 Substantiating Data

10.1 Testing has been performed under the supervision of a professional engineer and/or under the requirements of ISO/IEC 17025 as follows:

10.1.1 Lateral load testing in accordance with ASTM E2126 and analysis per ASTM D7989.

10.1.2 Transverse load testing in accordance with ASTM E330.

10.1.3 Uplift load testing in accordance with ASTM E72.

10.1.4 Water-resistive barrier testing in accordance with ASTM E331.

10.1.5 Water vapor transmission testing in accordance with ASTM E96.

10.1.6 Air barrier material testing in accordance with ASTM E2178.

Information contained in this report was developed using report holder's confidential intellectual property (IP) and trade secrets (TS), which is protected by Defend Trade Secrets Act 2016, © DrJ Engineering, LLC

10.2 Information contained herein may include the result of testing and/or data analysis by sources that are approved agencies, approved sources, and/or an RDP. Accuracy of external test data and resulting analysis is relied upon.

10.3 Where applicable, testing and/or engineering analysis are based upon provisions that have been codified into law through state or local adoption of regulations and standards. The developers of these regulations and standards are responsible for the reliability of published content. DrJ's engineering practice may use a regulation-adopted provision as the control. A regulation-endorsed control versus a simulation of the conditions of application to occur establishes a new material as being equivalent to the regulatory provision in terms of quality, strength, effectiveness, fire resistance, durability, and safety.

10.4 The accuracy of the provisions provided herein may be reliant upon the published properties of raw materials, which are defined by the grade mark, grade stamp, mill certificate, or duly authenticated reports from approved agencies and/or approved sources provided by the supplier. These are presumed to be minimum properties and relied upon to be accurate. The reliability of DrJ's engineering practice, as contained in this duly authenticated report, may be dependent upon published design properties by others.

10.5 *Testing and Engineering Analysis*

10.5.1 The strength, rigidity, and/or general performance of component parts and/or the integrated structure are determined by suitable tests that simulate the actual conditions of application that occur and/or by accepted engineering practice and experience.[41]

10.6 Where additional condition of use and/or regulatory compliance information is required, please search for DRYline TSX (Blue) Structural Sheathing on the DrJ Certification website.

11 Findings

11.1 As outlined in **Section 6**, DRYline TSX (Blue) Structural Sheathings have performance characteristics that were tested and/or meet applicable regulations. In addition, they are suitable for use pursuant to its specified purpose.

11.2 When used and installed in accordance with this duly authenticated report and the manufacturer installation instructions, DRYline TSX (Blue) Structural Sheathing shall be approved for the following applications:

11.2.1 Lateral load resistance due to wind and seismic loads carried by shear walls.

11.2.2 Use as an equivalent alternative to the CS-PF as described in IRC Section R602.10.5 and IRC Section R602.10.6.4.

11.2.3 Use as an equivalent alternative to Method PFH as described in IRC Section R602.10.6.2.

11.2.4 Transverse load resistance due to components and cladding pressures on building surfaces.

11.2.5 Uplift load resistance due to wind uplift loads carried by the walls.

11.2.6 Performance for use as a WRB in accordance with IBC Section 1403.2 and IRC Section R703.2.

11.2.7 Performance for use as an air barrier material in accordance with IRC Section N1102.5.1.1,[42] IECC Section R402.5.1.1,[43] IECC Section C402.6.1,[44] and IECC Section C402.6.2.3.1.[45]

11.3 Unless exempt by state statute, when DRYline TSX (Blue) Structural Sheathings are to be used as a structural and/or building envelope component in the design of a specific building, the design shall be performed by an RDP.

11.4 Any application specific issues not addressed herein can be engineered by an RDP. Assistance with engineering is available from National Shelter Products, Inc.

Information contained in this report was developed using report holder's confidential intellectual property (IP) and trade secrets (TS), which is protected by Defend Trade Secrets Act 2016, © DrJ Engineering, LLC

11.5 IBC Section 104.2.3[46] (IRC Section R104.2.2[47] and IFC Section 104.2.3[48] are similar) in pertinent part state:

> **104.2.3 Alternative Materials, Design and Methods of Construction and Equipment.** The provisions of this code are not intended to prevent the installation of any material or to prohibit any design or method of construction not specifically prescribed by this code, provided that any such alternative is not specifically prohibited by this code and has been approved.

11.6 **Approved:**[49] Building regulations require that the building official shall accept duly authenticated reports.[50]

11.6.1 An approved agency is *"approved"* when it is ANAB ISO/IEC 17065 accredited.

11.6.2 An approved source is *"approved"* when an RDP is properly licensed to transact engineering commerce.

11.6.3 Federal law, Title 18 US Code Section 242, requires that, where the alternative product, material, service, design, assembly, and/or method of construction is not approved, the building official shall respond in writing, stating the reasons why the alternative was not approved. Denial without written reason deprives a protected right to free and fair competition in the marketplace.

11.7 DrJ is a licensed engineering company, employs licensed RDPs and is an ANAB Accredited Product Certification Body – Accreditation #1131.

11.8 Through the IAF Multilateral Arrangement (MLA), this duly authenticated report can be used to obtain product approval in any jurisdiction or country because all ANAB ISO/IEC 17065 duly authenticated reports are equivalent.[51]

12 Conditions of Use

12.1 As defined in **Section 6**, where material and/or engineering mechanics properties are created for load resisting design purposes, the resistance to the applied load shall remain within the ability of the defined properties to resist those loads using the principles of accepted engineering practice.

12.2 As listed herein, DRYline TSX (Blue) Structural Sheathing shall be subject to the following conditions:

12.2.1 Fasteners used for the installation of exterior wall coverings shall engage an approved substrate independently of DRYline TSX (Blue) Structural Sheathing.

12.2.2 Horizontal loads from concrete and masonry walls shall be resisted by an independently designed structural system.

12.3 DRYline TSX (Blue) Structural Sheathing may have penetrations of up to 4" without the need for additional blocking. Penetrations larger than 4" require solid blocking around the perimeter of the penetration and the DRYline TSX (Blue) Structural Sheathing shall be fastened to the blocking at 3" o.c. Limit penetrations to one per wall stud cavity unless blocking is installed around the perimeter of each penetration.

12.4 When DRYline TSX (Blue) Structural Sheathing is not installed for use as wall bracing, as described in this report, the walls shall be braced by other materials, in accordance with the applicable code.

12.5 When used as a WRB, DRYline TSX (Blue) Structural Sheathing seams shall be overlapped $^{3}/_{4}$" (19 mm) or covered with minimum $1^{1}/_{2}$" (38 mm) wide DRYline Sheathing Tape or equivalent.

12.6 When used as part of a continuous air barrier assembly, all sheathing panel edges at the top and bottom of the wall assemblies, and all joints between sheathing panels, shall be sealed.

12.7 When used in accordance with the IBC in Seismic Design Categories C, D, E, or F, special inspections shall comply with IBC Section 1705.13.[52]

12.8 When used in accordance with the IBC in high wind areas, special inspections shall comply with IBC Section 1705.12.[53]

Information contained in this report was developed using report holder's confidential intellectual property (IP) and trade secrets (TS), which is protected by Defend Trade Secrets Act 2016, © DrJ Engineering, LLC

12.9 Loads applied shall remain within those recommended by the manufacturer as follows:

12.9.1 Allowable shear loads be limited to the values in **Table 5** for wind loads and **Table 6** for seismic loads.

12.9.2 Transverse design loads shall be limited to those described in **Table 7**, unless an approved exterior wall covering capable of separately resisting loads perpendicular to the face of the walls is installed over the sheathing.

12.10 All panel edges shall be supported by wall framing or solid blocking a minimum of 2" (51 mm) nominal in thickness.

12.11 DRYline TSX (Blue) Structural Sheathing is manufactured in Constantine, Michigan, under a quality control program with quality control inspections in accordance with IRC Section R109.2, IBC Section 110.3.10,[54] and IBC Section 110.4.

12.12 When required by adopted legislation and enforced by the building official, also known as the Authority Having Jurisdiction (AHJ) in which the project is to be constructed:

12.12.1 Any calculations incorporated into the construction documents shall conform to accepted engineering practice and, when prepared by an approved source, shall be approved when signed and sealed.

12.12.2 This report and the installation instructions shall be submitted at the time of permit application.

12.12.3 At a minimum, these innovative products shall be installed per **Section 9**.

12.12.4 The review of this report by the AHJ shall comply with IBC Section 104.2.3.2 and IBC Section 105.3.1.

12.12.5 These innovative products have an internal quality control program and a third party quality assurance program in accordance with IBC Section 104.7.2, IBC Section 110.4, IBC Section 1703, IRC Section R104.7.2, and IRC Section R109.2.

12.12.6 The application of these innovative products in the context of this report is dependent upon the accuracy of the construction documents, implementation of installation instructions, inspection as required by IBC Section 110.3, IRC Section R109.2, and any other regulatory requirements that may apply.

12.13 The approval of this report by the AHJ shall comply with IBC Section 1707.1, where legislation states in part, *"the building official shall make, or cause to be made, the necessary tests and investigations; or the building official shall accept duly authenticated reports from approved agencies in respect to the quality and manner of use of new materials or assemblies as provided for in Section 104.2.3,"* all of IBC Section 104, and IBC Section 105.3.

12.14 Design loads shall be determined in accordance with the regulations adopted by the jurisdiction in which the project is to be constructed and/or by the building designer (i.e., owner or RDP).

12.15 The actual design, suitability, and use of this report for any particular building, is the responsibility of the owner or the authorized agent of the owner.

13 Identification

13.1 DRYline TSX (Blue) Structural Sheathing and DRYline TSX ADVANCED AMP (Blue) Structural Sheathing, as listed in **Section 1**, are identified by a label on the board or packaging material bearing the manufacturer name, product name, this report number, and other information to confirm code compliance.

13.2 Additional technical information can be found at nationalshelter.com.

14 Review Schedule

14.1 This report is subject to periodic review and revision. For the latest version, visit drjcertification.org.

14.2 For information on the status of this report, please contact DrJ Certification.

Information contained in this report was developed using report holder's confidential intellectual property (IP) and trade secrets (TS), which is protected by Defend Trade Secrets Act 2016, © DrJ Engineering, LLC

Issue Date: January 10, 2022
Supplement Revision Date: November 20, 2026
Subject to Renewal: January 1, 2028

FBC Supplement to Report Number 1407-07

REPORT HOLDER: National Shelter Products, Inc.

1 Evaluation Subject

1.1 DRYline TSX (Blue) Structural Sheathing

1.2 DRYline TSX Advanced AMP (Blue) Structural Sheathing

1.2.1 Unless otherwise stated in this report, where DRYline TSX (Blue) Structural Sheathing is cited, the provisions apply equally to all DRYline TSX ADVANCED AMP (Advanced Air and Moisture Protection) (Blue) Structural Sheathing.

2 Purpose and Scope

2.1 Purpose

2.1.1 The purpose of this Report Supplement is to show DRYline TSX (Blue) Structural Sheathings, recognized in Report Number 1407-07, have also been evaluated for compliance with the codes listed below as adopted by the Florida Building Commission.

2.2 *Applicable Code Editions:*

2.2.1 *FBC-B – 23, 26: Florida Building Code – Building (FL 47188)*

2.2.2 *FBC-B – 23, 26: Florida Building Code – Residential (FL 47188)*

3 Conclusions

3.1 DRYline TSX (Blue) Structural Sheathings, described in Report Number 1407-07, comply with the FBC-B and FBC-R and are subject to the conditions of use described in this supplement.

3.2 Where there are variations between the IBC and IRC and the FBC-B and FBC-R applicable to this report, they are listed here:

3.2.1 FBC-B Section 104.6 is reserved and replaces IBC Section 104.4.

3.2.2 FBC-B Section 104.11 replaces IBC Section 104.2.3 and Section 104.2.3.2.

3.2.3 FBC-B Section 105.3 replaces IBC Section 105.3.

3.2.4 FBC-B Section 105.3.1 replaces IBC Section 105.3.1.

3.2.5 FBC-B Section 110.3 replaces IBC Section 110.3.

3.2.6 FBC-B Section 110.4 is reserved and replaces IBC Section 110.4.

3.2.7 FBC-B Section 1403.5 replaces IBC Section 1403.2.

3.2.8 FBC-B Section 1609.1.1 replaces IBC Section 1609.1.1.

3.2.9 FBC-B Section 1609.3.1 replaces IBC Section 1609.3.1.

3.2.10 FBC-B Section 1613 is reserved and replaces IBC Section 1613.

3.2.11 FBC-B Section 1705 is reserved and replaces IBC Section 1705.12 and IBC Section 1705.13.

3.2.12 FBC-B Section 1707.1 replaces IBC Section 1707.1.

Information contained in this report was developed using report holder's confidential intellectual property (IP) and trade secrets (TS), which is protected by Defend Trade Secrets Act 2016, © DrJ Engineering, LLC

3.2.13 FBC-B Section 2306.1 replaces IBC Section 2306.1.

3.2.14 FBC-B Section 2306.3 replaces IBC Section 2306.3.

3.2.15 FBC-B Section 2308 is reserved and replaces IBC Section 2308.9.3.2 and IBC Section 2308.10.

3.2.16 FBC-R Section N1101.1 replaces IRC Section N1102.5 and IRC Section N1102.5.1.1.

3.2.17 FBC-R Section R104 and Section R109 are reserved.

3.2.18 FBC-R Section R301.1 replaces IRC Section R301.1.

3.2.19 FBC-R Section R301.2.1 replaces IRC Section R301.2.1.

3.2.20 FBC-R Section R602.3.2 is reserved and replaces IRC Section R602.3.2.

3.2.21 FBC-R Section R602.10 is reserved and replaces IRC Section R602.10.

3.2.22 FBC-R Table R602.10.3(1) is reserved and replaces IRC Table R602.10.3(1).

3.2.23 FBC-R Table R602.10.3(2) is reserved and replaces IRC Table R602.10.3(2).

3.2.24 FBC-R Table R602.10.3(3) is reserved and replaces IRC Table R602.10.3(3).

3.2.25 FBC-R Table R602.10.3(4) is reserved and replaces IRC Table R602.10.3(4).

3.2.26 FBC-R Section R602.10.4 is reserved and replaces IRC Section R602.10.4.

3.2.27 FBC-R Section R602.10.5 is reserved and replaces IRC Section R602.10.5.

3.2.28 FBC-R Section R602.10.6.2 is reserved and replaces IRC Section R602.10.6.2.

3.2.29 FBC-R Section R602.10.6.4 is reserved and replaces IRC Section R602.10.6.4.

3.2.30 FBC-R Table R602.10.6.4 is reserved and replaces IRC Table R602.10.6.4.

3.2.31 FBC-R Section R703.2 replaces IRC Section R703.2.

3.2.32 FBC-R Section R806.5 replaces IRC Section R806.5.

4 Conditions of Use

4.1 DRYline TSX (Blue) Structural Sheathing, described in Report Number 1407-07, must comply with all of the following conditions:

4.1.1 All applicable sections in Report Number 1407-07.

4.1.2 The design, installation, and inspections are in accordance with additional requirements of FBC-B Chapter 16 and Chapter 17, as applicable.

Information contained in this report was developed using report holder's confidential intellectual property (IP) and trade secrets (TS), which is protected by Defend Trade Secrets Act 2016, © DrJ Engineering, LLC

Notes

1 For more information, visit drjcertification.org or call us at 608-310-6748.

2 Capitalized terms and responsibilities are defined pursuant to the applicable building code, applicable reference standards, the latest edition of TPI 1, the NDS, AISI S202, US professional engineering law, Canadian building code, Canada professional engineering law, Qualtim Appendix A: Definitions/Commentary, Qualtim Appendix B: Project/Deliverables, Qualtim Appendix C: Intellectual Property and Trade Secrets, definitions created within Design Drawings and/or definitions within Reference Sheets. Beyond this, terms not defined shall have ordinarily accepted meanings as the context implies. Words used in the present tense include the future; words stated in the masculine gender include the feminine and neuter; the singular number includes the plural, and the plural includes the singular.

3 https://up.codes/viewer/mississippi/ibc-2024/chapter/17/special-inspections-and-tests#1702

4 Alternative Materials, Design and Methods of Construction and Equipment: The provisions of any regulation code are not intended to prevent the installation of any material or to prohibit any design or method of construction not specifically prescribed by a regulation. Please review https://www.justice.gov/atr/mission and https://up.codes/viewer/mississippi/ibc-2024/chapter/1/scope-and-administration#104.2.3

5 https://up.codes/viewer/mississippi/ibc-2024/chapter/17/special-inspections-and-tests#1706.2:~:text=the%20design%20strengths%20and%20permissible%20stresses%20shall%20be%20established%20by%20tests

6 The design strengths and permissible stresses of any structural material shall conform to the specifications and methods of design of accepted engineering practice. https://up.codes/viewer/mississippi/ibc-2024/chapter/17/special-inspections-and-tests#1706.1:~:text=Conformance%20to%20Standards-,The%20design%20strengths%20and%20permissible%20stresses,-of%20any%20structural

7 https://up.codes/viewer/mississippi/ibc-2024/chapter/17/special-inspections-and-tests#1707.1:~:text=the%20building%20official%20shall%20make%2C%20or%20cause%20to%20be%20made%2C%20the%20necessary%20tests%20and%20investigations%3B%20or%20the%20building%20official%20shall%20accept%20duly%20authenticated%20reports%20from%20approved%20agencies%20in%20respect%20to%20the%20quality%20and%20manner%20of%20use%20of%20new%20materials%20or%20assemblies%20as%20provided%20for%20in%20Section%20104.2.3.

8 https://up.codes/viewer/mississippi/ibc-2024/chapter/17/special-inspections-and-tests#1703.4.2

9 https://up.codes/viewer/mississippi/ibc-2024/chapter/2/definitions#approved_agency_

10 https://up.codes/viewer/mississippi/ibc-2024/chapter/2/definitions#approved_source_

11 https://www.law.cornell.edu/uscode/text/18/1832 (b) Any organization that commits any offense described in subsection (a) shall be fined not more than the greater of $5,000,000 or 3 times the value of the stolen trade secret to the organization, including expenses for research and design and other costs of reproducing the trade secret that the organization has thereby avoided. The federal government and each state have a public records act. To follow DTSA and comply state public records and trade secret legislation requires approval through ANAB ISO/IEC 17065 accredited certification bodies or approved sources. For more information, please review this website: Intellectual Property and Trade Secrets.

12 https://www.nspe.org/resources/issues-and-advocacy/professional-policies-and-position-statements/regulation-professional AND https://apassociation.org/list-of-engineering-boards-in-each-state-archive/

13 https://www.cbitest.com/accreditation/

14 https://up.codes/viewer/mississippi/ibc-2024/chapter/1/scope-and-administration#104.1:~:text=directed%20to%20enforce%20the%20provisions%20of%20this%20code

15 https://up.codes/viewer/mississippi/ibc-2024/chapter/1/scope-and-administration#104.2.3 AND https://up.codes/viewer/mississippi/ibc-2024/chapter/1/scope-and-administration#105.3.1

16 https://up.codes/viewer/mississippi/ibc-2024/chapter/17/special-inspections-and-tests#1707.1

17 https://iaf.nu/en/about-iaf-mla/#:~:text=Once%20an%20accreditation%20body%20is%20a%20signatory%20of%20the%20IAF%20MLA%2C%20it%20is%20required%20to%20recognise%20certificates%20and%20validation%20and%20verification%20statements%20issued%20by%20conformity%20assessment%20bodies%20accredited%20by%20all%20other%20signatories%20of%20the%20IAF%20MLA%2C%20with%20the%20appropriate%20scope

18 True for all ANAB accredited product evaluation agencies and all International Trade Agreements.

19 https://www.justice.gov/crt/deprivation-rights-under-color-law AND https://www.justice.gov/atr/mission

20 Unless otherwise noted, the links referenced herein use un-amended versions of the 2024 International Code Council (ICC) 2024 International Code Council (ICC) model codes as foundation references. Mississippi versions of the IBC 2024 and the IRC 2024 are un-amended. This material, product, design, service and/or method of construction also complies with the 2000-2021 versions of the referenced codes and the standards referenced therein. As pertinent to this technical and code compliance evaluation, CBI and/or DrJ staff have reviewed any state or local regulatory amendments to assure this report is in compliance.

21 See Adoptions by Publisher for the latest adoption of a non-amended or amended model code by the local jurisdiction. https://up.codes/codes/general

22 See Adoptions by Publisher for the latest adoption of a non-amended or amended model code by state. https://up.codes/codes/general

23 https://www.ecfr.gov/current/title-24/subtitle-B/chapter-XX/part-3282/subpart-A/section-3282.14

24 https://www.ecfr.gov/current/title-24/subtitle-B/chapter-XX/part-3280

25 All references to the FBC-B and FBC-R are the same as the 2024 IBC and 2024 IRC unless otherwise noted in the Florida Supplement at the end of this report.

26 https://www.ecfr.gov/current/title-24/subtitle-B/chapter-XX/part-3280#p-3280.2(Listed%20or%20certified); https://up.codes/viewer/mississippi/ibc-2024/chapter/2/definitions#listed_ AND https://up.codes/viewer/mississippi/ibc-2024/chapter/2/definitions#labeled_

27 2021 IBC Section 2308.6

28 2021 IECC Section C402.5.1.3 AND 2018 IECC Section C402.5.1.2.1

29 2021 IRC Section N1102.4

30 2021 IECC Section C402.5

31 2021 IECC Section R402.4

32 2021 IRC Section N1102.4.1.1

33 2021 IECC Section R402.4.1.1

[34] https://up.codes/viewer/mississippi/ibc-2024/chapter/17/special-inspections-and-tests#1703.4

[35] https://www.ecfr.gov/current/title-24/subtitle-B/chapter-XX/part-3280#:~:text=All%20construction%20methods%20shall%20be%20in%20conformance%20with%20accepted%20engineering%20practices%20to%20insure%20durable%2C%20livable%2C%20and%20safe%20housing%20and%20shall%20demonstrate%20acceptable%20workmanship%20reflecting%20journeyman%20quality%20of%20work%20of%20the%20various%20trades

[36] https://www.ecfr.gov/current/title-24/subtitle-B/chapter-XX/part-3280#:~:text=The%20strength%20and%20rigidity%20of%20the%20component%20parts%20and/or%20the%20integrated%20structure%20shall%20be%20determined%20by%20engineering%20analysis%20or%20by%20suitable%20load%20tests%20to%20simulate%20the%20actual%20loads%20and%20conditions%20of%20application%20that%20occur

[37] 2021 IBC Section 2308.6

[38] 2021 IECC Section C402.5.1.3 AND 2018 IECC Section C402.5.1.2.1

[39] Qualification is performed by a legislatively defined Accreditation Body. ANSI National Accreditation Board (ANAB) is the largest independent accreditation body in North America and provides services in more than 75 countries. DrJ is an ANAB accredited product certification body.

[40] https://anabpd.ansi.org/Accreditation/product-certification/AllDirectoryDetails?prgID=1&orgID=2125&statusID=4#:~:text=Bill%20Payment%20Date-,Accredited%20Scopes,-13%20ENVIRONMENT.%20HEALTH

[41] See Code of Federal Regulations (CFR) Title 24 Subtitle B Chapter XX Part 3280 for definition: https://www.ecfr.gov/current/title-24/subtitle-B/chapter-XX/part-3280

[42] 2021 IRC Section N1102.4.1.1

[43] 2021 IECC Section R402.4.1.1

[44] 2021 IECC Section C402.5.1

[45] 2021 IECC Section C402.5.1.3 AND 2018 IECC Section C402.5.1.2.1

[46] 2021 IBC Section 104.11

[47] 2021 IRC Section R104.11

[48] 2018: https://up.codes/viewer/wyoming/ifc-2018/chapter/1/scope-and-administration#104.9 AND 2021: https://up.codes/viewer/wyoming/ibc-2021/chapter/1/scope-and-administration#104.11

[49] Approved is an adjective that modifies the noun after it. For example, Approved Agency means that the Agency is accepted officially as being suitable in a particular situation. This example conforms to IBC/IRC/IFC Section 201.4 (https://up.codes/viewer/mississippi/ibc-2024/chapter/2/definitions#201.4) where the building code authorizes sentences to have an ordinarily accepted meaning such as the context implies.

[50] https://up.codes/viewer/mississippi/ibc-2024/chapter/17/special-inspections-and-tests#1707.1

[51] Multilateral approval is true for all ANAB accredited product evaluation agencies and all International Trade Agreements.

[52] 2018 IBC Section 1705.12

[53] 2018 IBC Section 1705.11

[54] 2018 IBC Section 110.3.9

Information contained in this report was developed using report holder's confidential intellectual property (IP) and trade secrets (TS), which is protected by Defend Trade Secrets Act 2016, © DrJ Engineering, LLC