Listing

A Duly Authenticated Report from an Approved Agency

Report No: 2408-116

Issue Date: March 26, 2025

Revision Date: June 19, 2026

Subject to Renewal: July 1, 2027

Fall Protection Systems KITE Anchor Point

Trade Secret Report Holder:

ROTHO BLAAS SRL

Phone: +39 0471 81 84 00 Website: www.rothoblaas.com Email: info@rothoblaas.com

CSI Designations:

DIVISION: 11 00 00 - EQUIPMENT MANUFACTURERS
Section: 11 81 29 - Facility Fall Protection

DIVISION: 41 00 00 - MATERIAL PROCESSING AND HANDLING EQUIPMENT MANUFACTURERS
Section: 41 67 16 - Plant Fall Protection Equipment

1 Innovative Product Evaluated[1]

1.1 KITE Anchor Point

2 Product Description and Materials

2.1 The innovative product evaluated in this report is shown in **Figure 1** and **Figure 2**.



Figure 1. KITE Anchor Point

Information contained in this report was developed using report holder's confidential intellectual property (IP) and trade secrets (TS), which is protected by Defend Trade Secrets Act 2016, © DrJ Engineering, LLC

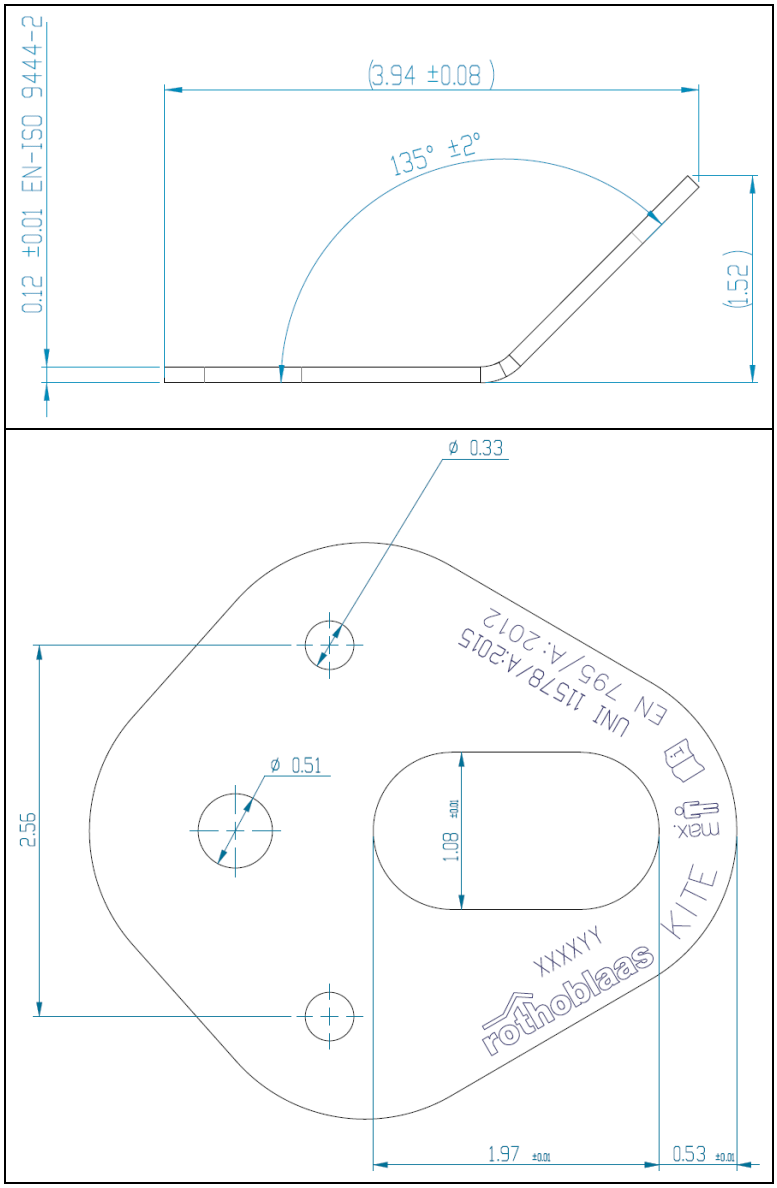

Figure 2. KITE Anchor Point – Dimensions

2.2 KITE Anchor Point is a fall arrest and restraint anchor device that may be installed onto inclined, flat, or vertical surfaces.

2.2.1 Compatible substrates are timber, concrete, and steel surfaces as shown in **Figure 3**.

2.3 KITE Anchor Point is manufactured from 11-gauge (3 mm) AISI 430 stainless steel (tensile strength, F_u, 65-ksi; yield strength, F_y, 37-ksi)

2.4 Overall width, length, and height of KITE Anchor Point is 4" x 4" x $1^1/_2$" (102 mm x 102 mm x 38 mm), respectively.

Information contained in this report was developed using report holder's confidential intellectual property (IP) and trade secrets (TS), which is protected by Defend Trade Secrets Act 2016, © DrJ Engineering, LLC



Figure 3. Compatible Substrates for Installation

2.5 As needed, review material properties for design in **Section 6**.

3 Definitions[2]

3.1 New Materials[3] are defined as building materials, equipment, appliances, systems, or methods of construction, not provided for by prescriptive and/or legislatively adopted regulations, known as alternative materials.[4] The design strength and permissible stresses shall be established by tests[5] and/or engineering analysis.[6]

3.2 Duly authenticated reports[7] and research reports[8] are test reports and related engineering evaluations that are written by an approved agency[9] and/or an approved source.[10]

3.2.1 This report utilizes intellectual property and/or trade secrets to create public domain material properties for commercial end-use.

3.2.1.1 This report protects confidential Intellectual Property and trade secrets under the regulation, 18.US.Code.90, also known as Defend Trade Secrets Act of 2016 (DTSA).[11]

3.3 An approved agency is *"approved"* when it is ANAB ISO/IEC 17065 accredited. DrJ Engineering, LLC (DrJ) is accredited and listed in the ANAB directory.

3.4 An approved source is *"approved"* when a professional engineer (i.e., Registered Design Professional, hereinafter RDP) is properly licensed to transact engineering commerce. The regulatory authority governing approved sources is the state legislature via its professional engineering regulations.[12]

3.5 Testing and/or inspections conducted for this duly authenticated report were performed by an ISO/IEC 17025 accredited testing laboratory, an ISO/IEC 17020 accredited inspection body, and/or a licensed RDP.

3.5.1 The Center for Building Innovation (CBI) is ANAB[13] ISO/IEC 17025 and ISO/IEC 17020 accredited.

3.6 The regulatory authority shall enforce[14] the specific provisions of each legislatively adopted regulation. If there is a non-conformance, the specific regulatory section and language of the non-conformance shall be provided in writing[15] stating the nonconformance and the path to its cure.

3.7 The regulatory authority shall accept duly authenticated reports from an approved agency and/or an approved source with respect to the quality and manner of use of new materials or assemblies as provided for in regulations regarding the use of alternative materials, designs, or methods of construction.[16]

3.8 ANAB is an International Accreditation Forum (IAF) Multilateral Recognition Arrangement (MLA) signatory. Therefore, recognition of certificates and validation statements issued by conformity assessment bodies accredited by all other signatories of the IAF MLA with the appropriate scope shall be approved.[17] Thus, all ANAB ISO/IEC 17065 duly authenticated reports are approval equivalent,[18] and can be used in any country that is an MLA signatory found at this link: https://iaf.nu/en/recognised-abs/

3.9 Approval equity is a fundamental commercial and legal principle.[19]

Information contained in this report was developed using report holder's confidential intellectual property (IP) and trade secrets (TS), which is protected by Defend Trade Secrets Act 2016, © DrJ Engineering, LLC

4 Applicable Standards for the Listing[20]

4.1 *Local, State, and Federal*

4.1.1 Approved in all local jurisdictions pursuant to ISO/IEC 17065 duly authenticated report use, which includes, but is not limited to, the following featured local jurisdictions: Austin, Baltimore, Broward County, Chicago, Clark County, Dade County, Dallas, Detroit, Denver, DuPage County, Fort Worth, Houston, Kansas City, King County, Knoxville, Las Vegas, Los Angeles City, Los Angeles County, Miami, Nashville, New York City, Omaha, Philadelphia, Phoenix, Portland, San Antonio, San Diego, San Jose, San Francisco, Seattle, Sioux Falls, South Holland, St. Louis County, Texas Department of Insurance, and Wichita.[21]

4.1.2 Approved in all state jurisdictions pursuant to ISO/IEC 17065 duly authenticated report use, which includes, but is not limited to, the following featured states: California, Florida, New Jersey, Oregon, New York, Texas, Washington, and Wisconsin.[22]

4.1.3 Approved by the Code of Federal Regulations Manufactured Home Construction: Pursuant to Title 24, Subtitle B, Chapter XX, Part 3282.14[23] and Part 3280[24] pursuant to the use of ISO/IEC 17065 duly authenticated reports.

4.1.4 Approved means complying with the requirements of local, state, or federal legislation.

4.2 *Standards*

4.2.1 *EN 364: Personal Protection Equipment Against Falls from a Height – Test Methods*

4.2.2 *EN 795: Personal Fall Protection Equipment – Anchor Devices*

4.2.3 *ISO 9227: Corrosion Tests in Artificial Atmospheres – Salt Spray Tests*

4.2.4 *OSHA 1926.592(d)(15)(i): Personal Fall Arrest Systems*

5 Listed[25]

5.1 Equipment, materials, products, or services included in a List published by a nationally recognized testing laboratory (e.g., CBI), an approved agency (e.g., CBI and DrJ), and/or any approved source (e.g., DrJ), or other organization(s) concerned with product evaluation (e.g., DrJ), that maintains periodic inspection (e.g., CBI) of production of listed equipment or materials, and whose listing states either that the equipment or material meets nationally recognized standards or has been tested and found suitable for use in a specified manner.

6 Tabulated Properties Generated from Nationally Recognized Standards

6.1 *Structural Applications*

6.1.1 KITE Anchor Point was evaluated for static strength performance and dynamic strength performance.

6.1.1.1 Evaluated substrates included timber, concrete, and steel.

6.1.2 *Static Strength:*

6.1.2.1 KITE Anchor Point, when installed in wood, concrete, or steel, can sustain a load of 2,700 lb (12 kN) for 3 minutes.

6.1.2.2 See **Figure 4** for evaluated load directions.

6.1.2.3 KITE Anchor Point, when installed in wood, concrete, or steel, can sustain a load of 157 lb (0.7 kN) for 1 minute without exceeding a deformation of $^{3}/_{8}$" (10 mm).

Information contained in this report was developed using report holder's confidential intellectual property (IP) and trade secrets (TS), which is protected by Defend Trade Secrets Act 2016, © DrJ Engineering, LLC

6.1.3 *Dynamic Strength:*

6.1.3.1 Dynamic strength evaluation of KITE Anchor Point consisted of a 220 lb (100 kg) mass attached to the anchor device with a 1 m rope.

6.1.3.1.1 The test mass was not detached from KITE Anchor Point after releasing the test mass from freefall height of 1.5 m.

6.1.3.1.2 Furthermore, the anchor device was able to keep the test mass suspended.

6.1.3.1.3 See **Figure 4** for evaluated load directions.

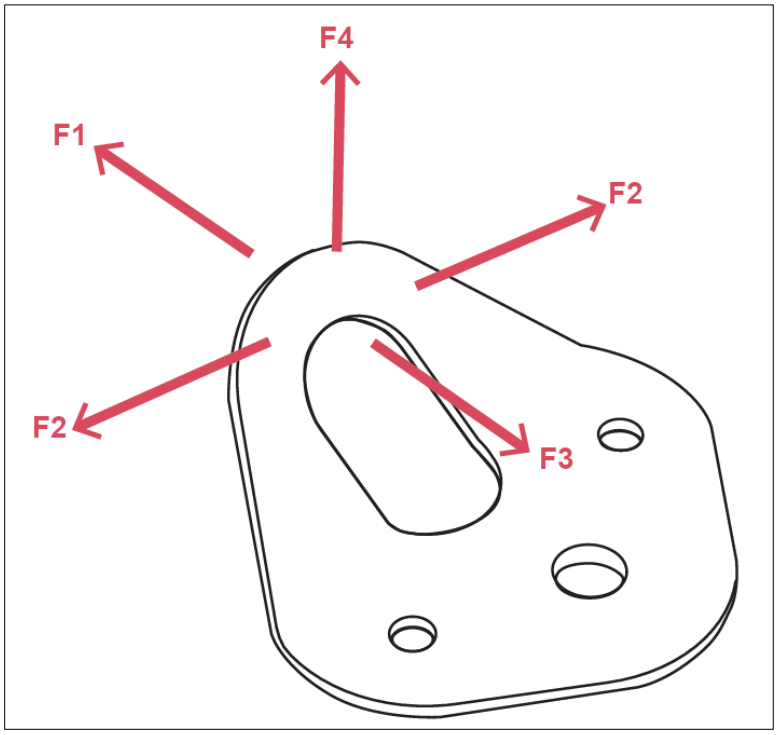

Figure 4. Load Directions

6.2 *Corrosion Resistance*

6.2.1 KITE Anchor Point was evaluated in accordance with ISO 9227 (neutral salt spray test).

6.2.1.1 KITE Anchor Point met the criteria set forth in ISO 9227, as no evidence of corrosion of the base material was apparent.

6.3 Alternative techniques shall be permitted in accordance with accepted engineering practice and experience. These provisions for the use of alternative materials, designs, and methods of construction are not intended to prevent the installation of any material or to prohibit any design or method of construction not specifically prescribed herein. This includes, but is not limited to, the following areas of engineering: mechanics of materials, structures, building science, and fire science.

Information contained in this report was developed using report holder's confidential intellectual property (IP) and trade secrets (TS), which is protected by Defend Trade Secrets Act 2016, © DrJ Engineering, LLC

7 Certified Performance[26]

7.1 All construction methods shall conform to accepted engineering practices to ensure durable, livable, and safe construction and shall demonstrate acceptable workmanship reflecting journeyman quality of work of the various trades.[27]

7.2 The strength and rigidity of the component parts and/or the integrated structure shall be determined by engineering analysis or by suitable load tests to simulate the actual loads and conditions of application that occur.[28]

8 Installation

8.1 Installation shall comply with the approved construction documents, the manufacturer installation instructions, this report, and the applicable building code.

8.2 In the event of a conflict between the manufacturer installation instructions and this report, contact the manufacturer for counsel on the proper installation method.

8.3 Before beginning work, measures shall be taken to prevent falling objects of any kind.

8.3.1 The area directly underneath the worksite (e.g., sidewalk, etc.) shall be kept clear.

8.4 *Timber Installation*

8.4.1 Timber species shall have a minimum nominal specific gravity of 0.42, and shall have a minimum cross section of 4" x 4" (102 mm x 102 mm).

8.4.2 Screws required for fastening KITE Anchor Point to the structure shall be $^{7}/_{16}$" (11 mm) diameter, one VGS screw in the center of the beam, and two $^{5}/_{16}$" (8 mm) diameter HBS screws.

8.4.2.1 VGS screws are fully threaded and HBS screws are partially threaded.

8.4.2.2 Length of both screw types shall be 4" (102 mm).

8.4.2.3 Fastener specifications are listed in **Table 1**, and are presented in **Figure 5** and **Figure 6**.

Table 1. VGS and HBS Fastener Specifications[1]

Parameter		Fastener	
		VGS	HBS
Fastener Length, L	in	4	4
Thread Length, T	in	$3^{1}/_{2}$	$2^{1}/_{16}$
Major Diameter, D	in	0.433	0.315
Minor Diameter, Dr	in	0.26	0.213
Tensile Strength	lb	3,200	2,040
Bending Yield Strength	psi	170,000	180,000
Withdrawal (SG: 0.42)	lb/in	171	125
SI: 1 in = 25.4 mm, 1 lb = 4.45 N, 1-psi = 0.0069 MPa, 1 lb/in = 0.18 N/mm			

Information contained in this report was developed using report holder's confidential intellectual property (IP) and trade secrets (TS), which is protected by Defend Trade Secrets Act 2016, © DrJ Engineering, LLC

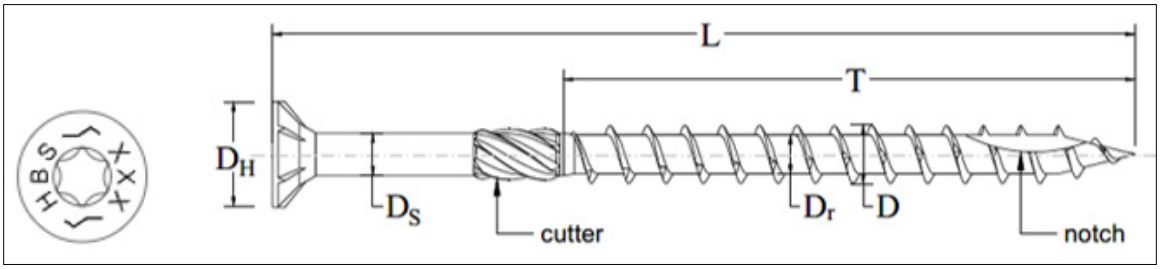

Figure 5. ROTHO BLAAS HBS Screw

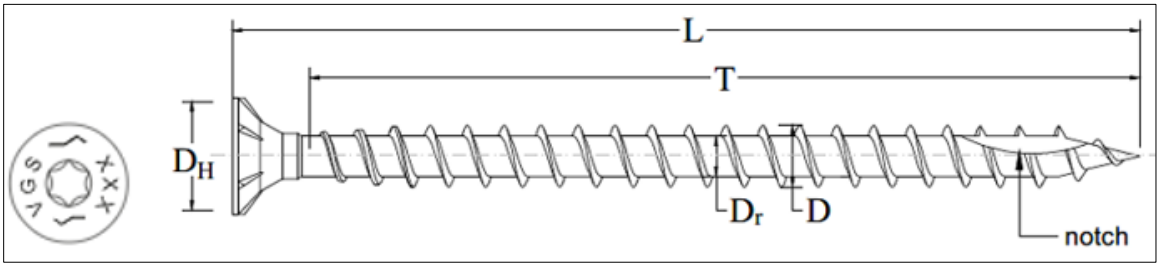

Figure 6. ROTHO BLAAS VGS Screw

8.4.2.4 As an alternative, should longer fastening screws be required, two $^{5}/_{16}$" (8 mm) diameter, HBS wood screws, 4" to $19^{11}/_{16}$" (102 mm to 500 mm) long, with or without washer, and one fully threaded, $^{7}/_{16}$" (11 mm) diameter, VGS screw, 4" to $23^{5}/_{8}$" (102 mm to 600 mm) long, with or without washer.

8.5 *Concrete Installation*

8.5.1 Concrete shall have a minimum slab thickness of $5^{1}/_{2}$" (140 mm), and a minimum compressive strength of 2,900-psi (20 MPa).

8.5.2 Post-installed concrete anchors may be used in the installation of the KITE Anchor Point onto concrete substrates.

8.5.2.1 One 4" (102 mm) ROTHO BLAAS AB1 expansion screw (or equivalent) may be used to install the KITE Anchor Point in cracked or uncracked concrete. See **Figure 7**.

8.5.2.1.1 When using AB1 expansion screw:

8.5.2.1.1.1 A $^{1}/_{2}$" (13 mm) diameter hole shall be drilled to a minimum depth of $3^{1}/_{2}$" (90 mm).

8.5.2.1.1.2 Minimum edge distance shall be $4^{1}/_{8}$" (105 mm).

8.5.2.1.1.3 Concrete anchor shall be torqued to 37 lb•ft (50 N•m).

Information contained in this report was developed using report holder's confidential intellectual property (IP) and trade secrets (TS), which is protected by Defend Trade Secrets Act 2016, © DrJ Engineering, LLC

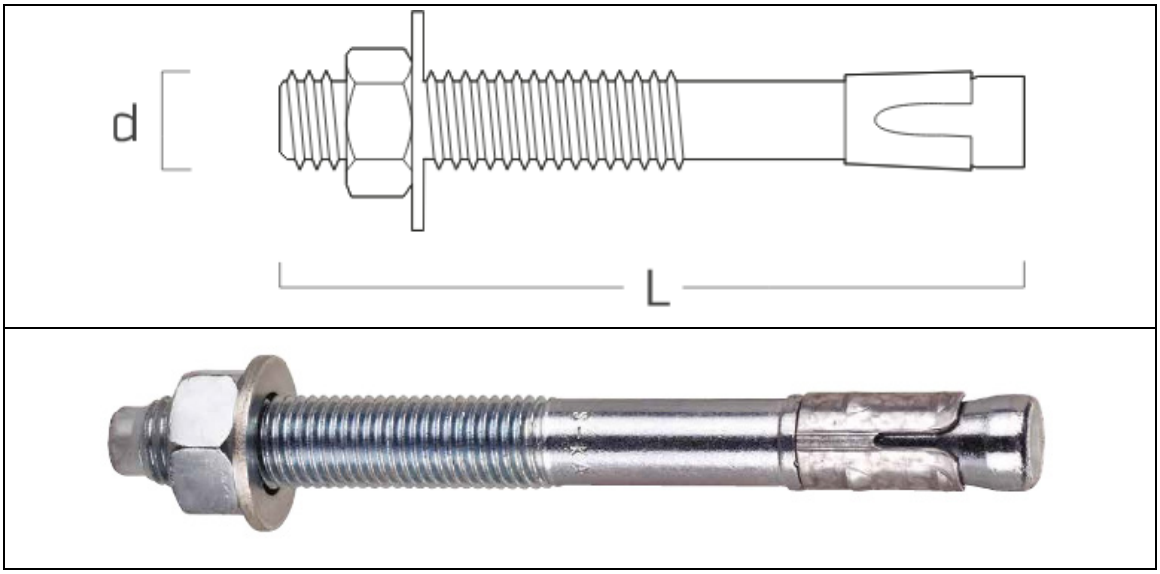

Figure 7. ROTHO BLAAS AB1 Heavy-Duty Expansion Anchor

8.6 *Steel Installation*

8.6.1 Steel structure shall have a minimum yield strength of 34-ksi (235 MPa), and a minimum thickness of $^{3}/_{16}$" (5 mm).

8.6.2 One M12 steel bolt (DIN Strength Grade 8.8) with a self-locking nut may be used to install the KITE Anchor Point onto steel structures.

8.6.2.1 DIN Strength Grade 8.8 has a tensile strength of 120-ksi (830 MPa).

9 Substantiating Data

9.1 Testing has been performed under the supervision of a professional engineer and/or under the requirements of ISO/IEC 17025 as follows:

9.1.1 Fall arrest system anchor testing in accordance with EN 795

9.2 Information contained herein may include the result of testing and/or data analysis by sources that are approved agencies, approved sources, and/or an RDP. Accuracy of external test data and resulting analysis is relied upon.

9.3 Where applicable, testing and/or engineering analysis are based upon provisions that have been codified into law through state or local adoption of regulations and standards. The developers of these regulations and standards are responsible for the reliability of published content. DrJ's engineering practice may use a regulation-adopted provision as the control. A regulation-endorsed control versus a simulation of the conditions of application to occur establishes a new material as being equivalent to the regulatory provision in terms of quality, strength, effectiveness, fire resistance, durability, and safety.

9.4 The accuracy of the provisions provided herein may be reliant upon the published properties of raw materials, which are defined by the grade mark, grade stamp, mill certificate, or duly authenticated reports from approved agencies and/or approved sources provided by the supplier. These are presumed to be minimum properties and relied upon to be accurate. The reliability of DrJ's engineering practice, as contained in this duly authenticated report, may be dependent upon published design properties by others.

Information contained in this report was developed using report holder's confidential intellectual property (IP) and trade secrets (TS), which is protected by Defend Trade Secrets Act 2016, © DrJ Engineering, LLC

9.5 *Testing and Engineering Analysis*

9.5.1 The strength, rigidity, and/or general performance of component parts and/or the integrated structure are determined by suitable tests that simulate the actual conditions of application that occur and/or by accepted engineering practice and experience.[29]

9.6 Where additional condition of use and/or regulatory compliance information is required, please search for KITE Anchor Point on the DrJ Certification website.

10 Findings

10.1 As outlined in **Section 6**, KITE Anchor Point has performance characteristics that were tested and/or meet applicable regulations. In addition, they are suitable for use pursuant to its specified purpose.

10.2 When used and installed in accordance with this duly authenticated report and the manufacturer installation instructions, KITE Anchor Point shall be approved for the following applications:

10.2.1 As an anchor device in a fall arrest system for fall protection.

10.2.2 OSHA Regulation 29 CFR § 1926.502(d)(15): Personal Fall Arrest Systems

10.2.2.1 Anchorages used for attachment of personal fall arrest equipment shall be independent of any anchorage being used to support or suspend platforms and are capable of supporting at least 5,000 pounds (22.2 kN) per employee attached. KITE Anchor Point shall be designed, installed, and used as follows:

10.2.2.1.1 As part of a complete personal fall arrest system which maintains a safety factor of at least two.

10.2.2.1.2 Under the supervision of a qualified person.

10.2.2.1.3 29 CFR § 1926.502(d)(15) requires the anchorages to support 5,000 pounds per employee or as an alternative (d)(15)(i) requires maintaining a factor of safety of at least two, to the maximum fall arresting force of the personal fall arrest system. Maximum fiber stresses, based on either a 5,000 pound load per employee attached, or two times the maximum fall arresting force of the system, are limited by the yield strength of the supporting member (when permanent deformation first begins).

10.3 Unless exempt by state statute, when KITE Anchor Point is to be used as a structural and/or building envelope component in the design of a specific building, the design shall be performed by an RDP.

10.4 Any application specific issues not addressed herein can be engineered by an RDP. Assistance with engineering is available from ROTHO BLAAS SRL.

10.5 IBC Section 104.2.3[30] (IRC Section R104.2.2[31] and IFC Section 104.2.3[32] are similar) in pertinent part state:

> **104.2.3 Alternative Materials, Design and Methods of Construction and Equipment.** The provisions of this code are not intended to prevent the installation of any material or to prohibit any design or method of construction not specifically prescribed by this code, provided that any such alternative is not specifically prohibited by this code and has been approved.

10.6 **Approved:**[33] Building regulations require that the building official shall accept duly authenticated reports.[34]

10.6.1 An approved agency is *"approved"* when it is ANAB ISO/IEC 17065 accredited.

10.6.2 An approved source is *"approved"* when an RDP is properly licensed to transact engineering commerce.

10.6.3 Federal law, Title 18 US Code Section 242, requires that, where the alternative product, material, service, design, assembly, and/or method of construction is not approved, the building official shall respond in writing, stating the reasons why the alternative was not approved. Denial without written reason deprives a protected right to free and fair competition in the marketplace.

Information contained in this report was developed using report holder's confidential intellectual property (IP) and trade secrets (TS), which is protected by Defend Trade Secrets Act 2016, © DrJ Engineering, LLC

10.7 DrJ is a licensed engineering company, employs licensed RDPs and is an ANAB Accredited Product Certification Body – Accreditation #1131.

10.8 Through the IAF Multilateral Arrangement (MLA), this duly authenticated report can be used to obtain product approval in any jurisdiction or country because all ANAB ISO/IEC 17065 duly authenticated reports are equivalent.[35]

11 Conditions of Use

11.1 As defined in **Section 6**, where material and/or engineering mechanics properties are created for load resisting design purposes, the resistance to the applied load shall not exceed the ability of the defined properties to resist those loads using the principles of accepted engineering practice.

11.2 As listed herein, KITE Anchor Point shall not be used:

11.2.1 As an anchor device for a horizontal lifeline.

11.2.2 As an anchor point for more than one person.

11.2.3 For any other purpose other than an anchor point in a personal fall arrest system.

11.2.3.1 Undefined loads shall not be attached to the system.

11.3 Prior to use, check for visible defects and the vertical clearance under the user at the work level.

11.3.1 Defects may include loose screws, warping, wear, corrosion, etc.

11.4 Attaching to KITE Anchor Point shall occur via the eyelet using a snap-hook.

11.5 KITE Anchor Point shall not be altered or modified in any way.

11.6 Installers shall verify that the substrate is suitable for securement of the KITE Anchor Point.

11.6.1 Substrates not specified in this report are outside the scope of this report and shall be designed by a registered engineer.

11.7 Stainless steel shall not come into contact with steel grinding dust or steel tools in order to prevent galvanic corrosion.

11.8 When required by adopted legislation and enforced by the building official, also known as the Authority Having Jurisdiction (AHJ) in which the project is to be constructed:

11.8.1 Any calculations incorporated into the construction documents shall conform to accepted engineering practice and, when prepared by an approved source, shall be approved when signed and sealed.

11.8.2 This report and the installation instructions shall be submitted at the time of permit application.

11.8.3 At a minimum, this innovative product shall be installed per **Section 8**.

11.8.4 The review of this report by the AHJ shall comply with IBC Section 104.2.3.2 and IBC Section 105.3.1.

11.8.5 This innovative product has an internal quality control program and a third party quality assurance program in accordance with IBC Section 104.7.2, IBC Section 110.4, IBC Section 1703, IRC Section R104.7.2, and IRC Section R109.2.

11.8.6 The application of this innovative product in the context of this report is dependent upon the accuracy of the construction documents, implementation of installation instructions, inspection as required by IBC Section 110.3, IRC Section R109.2, and any other regulatory requirements that may apply.

11.9 The approval of this report by the AHJ shall comply with IBC Section 1707.1, where legislation states in part, *"the building official shall make, or cause to be made, the necessary tests and investigations; or the building official shall accept duly authenticated reports from approved agencies in respect to the quality and manner of use of new materials or assemblies as provided for in Section 104.2.3"*, all of IBC Section 104, and IBC Section 105.3.

Information contained in this report was developed using report holder's confidential intellectual property (IP) and trade secrets (TS), which is protected by Defend Trade Secrets Act 2016, © DrJ Engineering, LLC

11.10 Design loads shall be determined in accordance with the regulations adopted by the jurisdiction in which the project is to be constructed and/or by the building designer (i.e., owner or RDP).

11.11 The actual design, suitability, and use of this report for any particular building, is the responsibility of the owner or the authorized agent of the owner.

12 Identification

12.1 KITE Anchor Point, as listed in **Section 1.1**, is identified by a label on the board or packaging material bearing the manufacturer name, product name, this report number, and other information to confirm code compliance.

12.2 Additional technical information can be found at www.rothoblaas.com.

13 Review Schedule

13.1 This report is subject to periodic review and revision. For the latest version, visit www.drjcertification.org.

13.2 For information on the status of this report, please contact DrJ Certification.

Information contained in this report was developed using report holder's confidential intellectual property (IP) and trade secrets (TS), which is protected by Defend Trade Secrets Act 2016, © DrJ Engineering, LLC

Notes

1 For more information, visit drjcertification.org or call us at 608-310-6748.

2 Capitalized terms and responsibilities are defined pursuant to the applicable building code, applicable reference standards, the latest edition of TPI 1, the NDS, AISI S202, US professional engineering law, Canadian building code, Canada professional engineering law, Qualtim External Appendix A: Definitions/Commentary, Qualtim External Appendix B: Project/Deliverables, Qualtim External Appendix C: Intellectual Property and Trade Secrets, definitions created within Design Drawings and/or definitions within Reference Sheets. Beyond this, terms not defined shall have ordinarily accepted meanings as the context implies. Words used in the present tense include the future; words stated in the masculine gender include the feminine and neuter; the singular number includes the plural and the plural, the singular.

3 https://up.codes/viewer/mississippi/ibc-2024/chapter/17/special-inspections-and-tests#1702

4 Alternative Materials, Design and Methods of Construction and Equipment: The provisions of any regulation code are not intended to prevent the installation of any material or to prohibit any design or method of construction not specifically prescribed by a regulation. Please review https://www.justice.gov/atr/mission and https://up.codes/viewer/mississippi/ibc-2024/chapter/1/scope-and-administration#104.2.3

5 https://up.codes/viewer/mississippi/ibc-2024/chapter/17/special-inspections-and-tests#1706.2:~:text=the%20design%20strengths%20and%20permissible%20stresses%20shall%20be%20established%20by%20tests

6 The design strengths and permissible stresses of any structural material shall conform to the specifications and methods of design of accepted engineering practice. https://up.codes/viewer/mississippi/ibc-2024/chapter/17/special-inspections-and-tests#1706.1:~:text=Conformance%20to%20Standards-,The%20design%20strengths%20and%20permissible%20stresses,-of%20any%20structural

7 https://up.codes/viewer/mississippi/ibc-2024/chapter/17/special-inspections-and-tests#1707.1:~:text=the%20building%20official%20shall%20make%2C%20or%20cause%20to%20be%20made%2C%20the%20necessary%20tests%20and%20investigations%3B%20or%20the%20building%20official%20shall%20accept%20duly%20authenticated%20reports%20from%20approved%20agencies%20in%20respect%20to%20the%20quality%20and%20manner%20of%20use%20of%20new%20materials%20or%20assemblies%20as%20provided%20for%20in%20Section%20104.2.3.

8 https://up.codes/viewer/mississippi/ibc-2024/chapter/17/special-inspections-and-tests#1703.4.2

9 https://up.codes/viewer/mississippi/ibc-2024/chapter/2/definitions#approved_agency

10 https://up.codes/viewer/mississippi/ibc-2024/chapter/2/definitions#approved_source

11 https://www.law.cornell.edu/uscode/text/18/1832 (b) Any organization that commits any offense described in subsection (a) shall be fined not more than the greater of $5,000,000 or 3 times the value of the stolen trade secret to the organization, including expenses for research and design and other costs of reproducing the trade secret that the organization has thereby avoided. The federal government and each state have a public records act. To follow DTSA and comply state public records and trade secret legislation requires approval through ANAB ISO/IEC 17065 accredited certification bodies or approved sources. For more information, please review this website: Intellectual Property and Trade Secrets.

12 https://www.nspe.org/resources/issues-and-advocacy/professional-policies-and-position-statements/regulation-professional AND https://apassociation.org/list-of-engineering-boards-in-each-state-archive/

13 https://www.cbitest.com/accreditation/

14 https://up.codes/viewer/mississippi/ibc-2024/chapter/1/scope-and-administration#104.1:~:text=directed%20to%20enforce%20the%20provisions%20of%20this%20code

15 https://up.codes/viewer/mississippi/ibc-2024/chapter/1/scope-and-administration#104.2.3 AND https://up.codes/viewer/mississippi/ibc-2024/chapter/1/scope-and-administration#105.3.1

16 https://up.codes/viewer/mississippi/ibc-2024/chapter/17/special-inspections-and-tests#1707.1

17 https://iaf.nu/en/about-iaf-mla/#:~:text=Once%20an%20accreditation%20body%20is%20a%20signatory%20of%20the%20IAF%20MLA%2C%20it%20is%20required%20to%20recognise%20certificates%20and%20validation%20and%20verification%20statements%20issued%20by%20conformity%20assessment%20bodies%20accredited%20by%20all%20other%20signatories%20of%20the%20IAF%20MLA%2C%20with%20the%20appropriate%20scope

18 True for all ANAB accredited product evaluation agencies and all International Trade Agreements.

19 https://www.justice.gov/crt/deprivation-rights-under-color-law AND https://www.justice.gov/atr/mission

20 Unless otherwise noted, the links referenced herein use un-amended versions of the 2024 International Code Council (ICC) 2024 International Code Council (ICC) model codes as foundation references. Mississippi versions of the IBC 2024 and the IRC 2024 are un-amended. This material, product, design, service and/or method of construction also complies with the 2000-2012 versions of the referenced codes and the standards referenced therein. As pertinent to this technical and code compliance evaluation, CBI and/or DrJ staff have reviewed any state or local regulatory amendments to assure this report is in compliance.

21 See Adoptions by Publisher for the latest adoption of a non-amended or amended model code by the local jurisdiction. https://up.codes/codes/general

22 See Adoptions by Publisher for the latest adoption of a non-amended or amended model code by state. https://up.codes/codes/general

23 https://www.ecfr.gov/current/title-24/subtitle-B/chapter-XX/part-3282/subpart-A/section-3282.14

24 https://www.ecfr.gov/current/title-24/subtitle-B/chapter-XX/part-3280

25 https://www.ecfr.gov/current/title-24/subtitle-B/chapter-XX/part-3280#p-3280.2(Listed%20or%20certified); https://up.codes/viewer/mississippi/ibc-2024/chapter/2/definitions#listed AND https://up.codes/viewer/mississippi/ibc-2024/chapter/2/definitions#labeled

26 https://up.codes/viewer/mississippi/ibc-2024/chapter/17/special-inspections-and-tests#1703.4

27 https://www.ecfr.gov/current/title-24/subtitle-B/chapter-XX/part-3280#:~:text=All%20construction%20methods%20shall%20be%20in%20conformance%20with%20accepted%20engineering%20practices%20to%20insure%20durable%2C%20livable%2C%20and%20safe%20housing%20and%20shall%20demonstrate%20acceptable%20workmanship%20reflecting%20journeyman%20quality%20of%20work%20of%20the%20various%20trades

28 https://www.ecfr.gov/current/title-24/subtitle-B/chapter-XX/part-3280#:~:text=The%20strength%20and%20rigidity%20of%20the%20component%20parts%20and/or%20the%20integrated%20structure%20shall%20be%20determined%20by%20engineering%20analysis%20or%20by%20suitable%20load%20tests%20to%20simulate%20the%20actual%20loads%20and%20conditions%20of%20application%20that%20occur

29 See Code of Federal Regulations (CFR) Title 24 Subtitle B Chapter XX Part 3280 for definition: https://www.ecfr.gov/current/title-24/subtitle-B/chapter-XX/part-3280

Information contained in this report was developed using report holder's confidential intellectual property (IP) and trade secrets (TS), which is protected by Defend Trade Secrets Act 2016, © DrJ Engineering, LLC

[30] 2021 IBC Section 104.11

[31] 2021 IRC Section R104.11

[32] 2018: https://up.codes/viewer/wyoming/ifc-2018/chapter/1/scope-and-administration#104.9 AND 2021: https://up.codes/viewer/wyoming/ibc-2021/chapter/1/scope-and-administration#104.11

[33] Approved is an adjective that modifies the noun after it. For example, Approved Agency means that the Agency is accepted officially as being suitable in a particular situation. This example conforms to IBC/IRC/IFC Section 201.4 (https://up.codes/viewer/mississippi/ibc-2024/chapter/2/definitions#201.4) where the building code authorizes sentences to have an ordinarily accepted meaning such as the context implies.

[34] https://up.codes/viewer/mississippi/ibc-2024/chapter/17/special-inspections-and-tests#1707.1

[35] Multilateral approval is true for all ANAB accredited product evaluation agencies and all International Trade Agreements.

Information contained in this report was developed using report holder's confidential intellectual property (IP) and trade secrets (TS), which is protected by Defend Trade Secrets Act 2016, © DrJ Engineering, LLC