Listing

A Duly Authenticated Report from an Approved Agency

Report No: 2406-121

Issue Date: January 17, 2025

Revision Date: January 8, 2026

Subject to Renewal: January 8, 2026

ROTHO BLAAS R80100L Post Base

Trade Secret Report Holder:

ROTHO BLAAS SRL

Phone: +39 0471 81 84 00 Website: www.rothoblaas.com Email: info@rothoblaas.com

CSI Designations:

DIVISION: 06 00 00 - WOOD, PLASTICS AND COMPOSITES Section: 06 05 23 - Wood, Plastic, and Composite Fastenings

1 Innovative Product Evaluated[1]

1.1 R80100L Post Base:

1.1.1 R80100L_1 Post Base

1.1.2 R80100L_2 Post Base

2 Product Description and Materials

2.1 The innovative product evaluated in this report is shown in **Figure 1** through **Figure 4**.

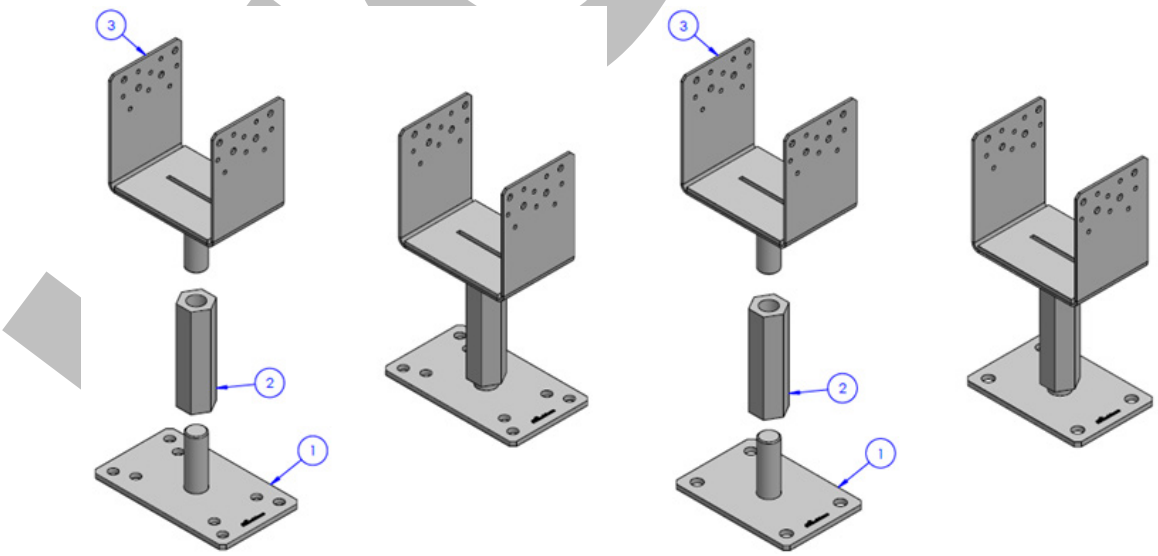

Figure 1. R80100L_1 (Left) and R80100L_2 (Right)

LEGACY

Confidential Intellectual Property is protected by Defend Trade Secrets Act 2016, ©DrJ Engineering, LLC

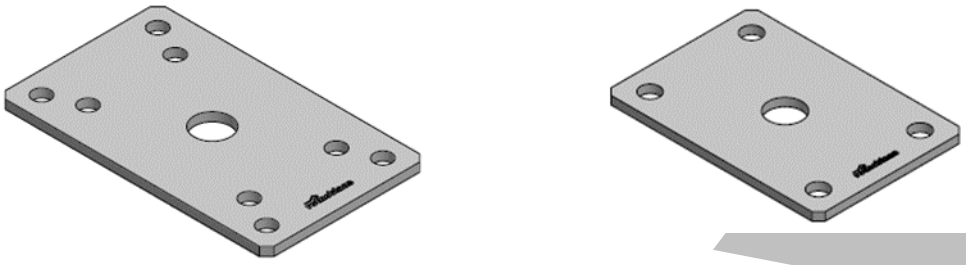

Figure 2. R80100L_1 Bottom Plate (Left) and R80100L_2 Bottom Plate (Right)

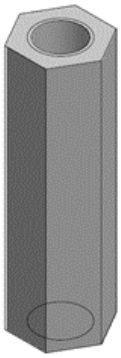

Figure 3. Hexagonal Core

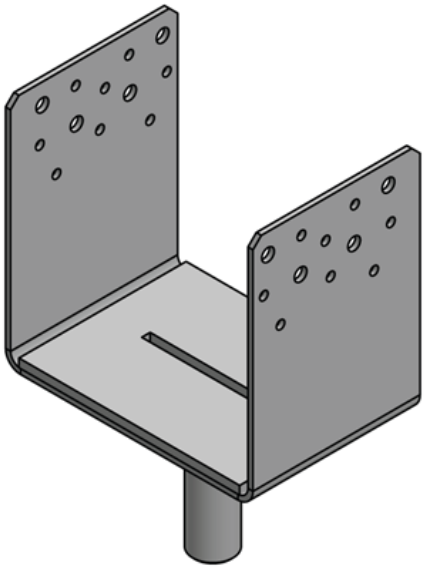

Figure 4. Completed U-Plate Top Plate

LEGACY

Table 1. Dimensions of R80100L Post Base and Components

Product	Total Structure (in)	Component	Thickness/Height (in)	Width (in)	Length (in)
R80100L Post Base	Height:[1] Minimum: 11.97 Maximum: 14.53	R80100L_1 Bottom Plate	0.24	4.33	7.29
		R80100L_2 Bottom Plate	0.24	4.33	6.30
		U-Plate Top Plate[2] (Bucket)	5.48	3.94	5.83
		U-Plate Top Plate (Base Plate)	0.20	3.94	5.20
		Component	**Length (in)**	**Width (in)**	**Thread Size**
		Bottom Plate Threaded Rod[3]	2.84	-	M24
		U-Plate Top Plate Threaded Rod	3.27	-	M24
		Hexagonal Core	4.96	1.42	M24

SI: 1 in = 25.4 mm

1. Extension Max: 9", Min: 6.7", measured from the bottom of the base plate to the bottom of the top plate.
2. The U-Plate Top Plate may have fastener holes in a mirrored pattern to what is shown in **Figure 4**. The hole pattern does not affect the design loads in **Section 6**. See **Figure 5**.
3. Threaded rod not shown in **Figure 2**.

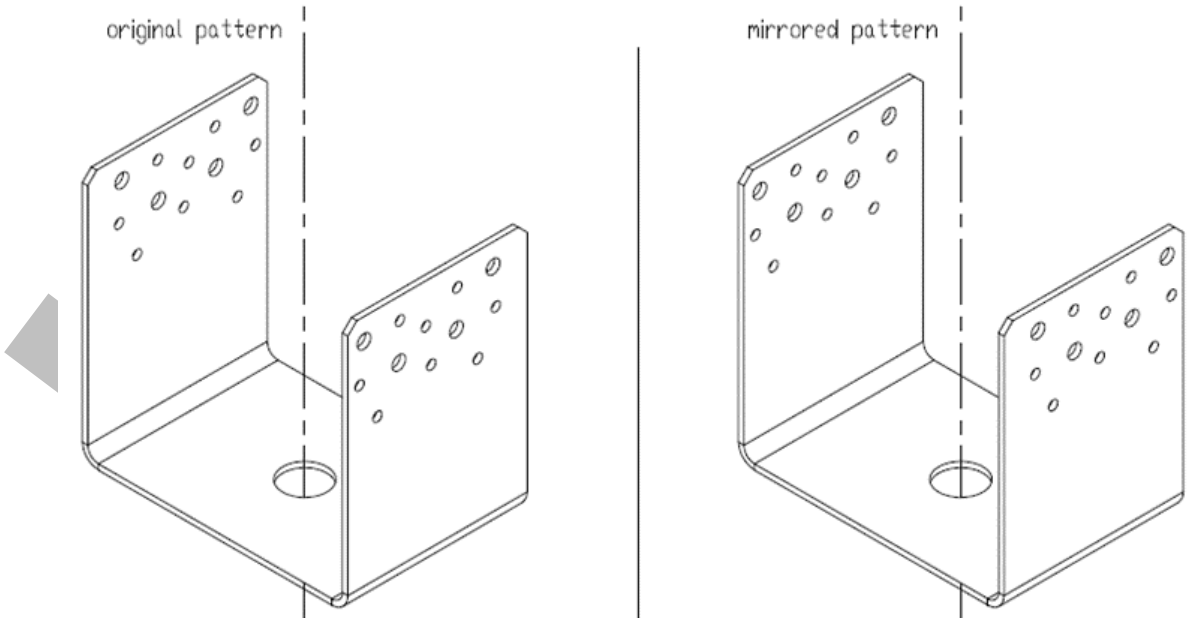

Figure 5. U-Plate Top Plate Variants

Confidential Intellectual Property is protected by Defend Trade Secrets Act 2016, ©DrJ Engineering, LLC

2.2 R80100L Post Base is an adjustable post base to be used with 6 x 6 lumber products.

2.3 As needed, review material properties for design in **Section 6**.

3 Definitions

3.1 New Materials[2] are defined as building materials, equipment, appliances, systems or methods of construction not provided for by prescriptive and/or legislatively adopted regulations, known as alternative materials.[3] The design strengths and permissible stresses shall be established by tests[4] and/or engineering analysis.[5]

3.2 Duly Authenticated Reports[6] and Research Reports[7] are test reports and related engineering evaluations, which are written by an approved agency[8] and/or an approved source.[9]

3.2.1 These reports contain intellectual property and/or trade secrets, which are protected by the Defend Trade Secrets Act (DTSA).[10]

3.3 An approved agency is *"approved"* when it is ANAB ISO/IEC 17065 accredited. DrJ Engineering, LLC (DrJ) is listed in the ANAB directory.

3.4 An approved source is *"approved"* when a professional engineer (i.e., Registered Design Professional) is properly licensed to transact engineering commerce. The regulatory authority governing approved sources is the state legislature via its professional engineering regulations.[11]

3.5 Testing and/or inspections conducted for this Duly Authenticated Report were performed by an ISO/IEC 17025 accredited testing laboratory, an ISO/IEC 17020 accredited inspection body and/or a licensed Registered Design Professional (RDP).

3.5.1 The Center for Building Innovation (CBI) is ANAB[12] ISO/IEC 17025 and ISO/IEC 17020 accredited.

3.6 The regulatory authority shall enforce[13] the specific provisions of each legislatively adopted regulation. If there is a non-conformance, the specific regulatory section and language of the non-conformance shall be provided in writing[14] stating the nonconformance and the path to its cure.

3.7 The regulatory authority shall accept Duly Authenticated Reports from an approved agency and/or an approved source with respect to the quality and manner of use of new materials or assemblies as provided for in regulations regarding the use of alternative materials, designs or methods of construction.[15]

3.8 ANAB is an International Accreditation Forum (IAF) Multilateral Recognition Arrangement (MLA) signatory where recognition of certificates, validation and verification statements issued by conformity assessment bodies accredited by all other signatories of the IAF MLA with the appropriate scope, shall be approved.[16] Therefore, all ANAB ISO/IEC 17065 Duly Authenticated Reports are approval equivalent.[17]

3.9 Approval equity is a fundamental commercial and legal principle.[18]

4 Applicable Standards for the Listing; Regulations for the Regulatory Evaluation[19]

4.1 *Standards*

4.1.1 *ANSI S913-17: Test Standard for Determining the Strength and Deformation Behavior of Hold-Downs Attached to Cold-Formed Steel Structural Framing*

4.1.2 *ASTM A653: Standard Specification for Steel Sheet, Zinc-Coated (Galvanized) or Zinc-Iron Alloy-Coated (Galvannealed) by the Hot-Dip Process*

4.1.3 *EN 26891:1991 - Timber structures. Joints made with mechanical fasteners. General principles for the determination of strength and deformation characteristics.*

4.1.4 *EN ISO 9227:2017 - Corrosion tests in artificial atmospheres - Salt spray tests"*

4.1.5 *UNI EN ISO 3231:1999 - Determination of resistance to humid atmospheres containing sulfur dioxide*

4.1.6 *UNI EN ISO 6270-2:2005 - Determination of resistance to humidity Part 2: Procedure for exposing test specimens in condensation-water atmospheres*

LEGACY

Confidential Intellectual Property is protected by Defend Trade Secrets Act 2016, ©DrJ Engineering, LLC

4.2 *Regulations*

4.2.1 *IBC – 15, 18, 21: International Building Code®*

4.2.2 *IRC – 15, 18, 21: International Residential Code®*

4.2.3 *FBC-B—20, 23: Florida Building Code – Building[20] (FL47259)*

4.2.4 *FBC-R—20, 23: Florida Building Code – Residential[20] (FL47259)*

5 Listed[21]

5.1 Equipment, materials, products or services included in a List published by a nationally recognized testing laboratory (i.e., CBI), approved agency (i.e., CBI and DrJ), and/or approved source (i.e., DrJ) or other organization concerned with product evaluation (i.e., DrJ) that maintains periodic inspection (i.e., CBI) of production of listed equipment or materials, and whose listing states either that the equipment or material meets nationally recognized standards or has been tested and found suitable for use in a specified manner.

6 Tabulated Properties Generated from Nationally Recognized Standards

6.1 *General*

6.1.1 R80100L Post Base is used to resist uplift and compression loads imposed on post connections in light-frame construction.

6.1.2 Allowable loads for R80100L Post Base were derived using testing and calculations in accordance with the NDS.

6.1.3 Tabulated allowable loads listed in **Section 6** apply to wood used in dry conditions and where sustained temperatures are 100° F.

6.1.3.1 When connectors are installed in conditions exposed to temperatures exceeding 100° F, the allowable loads shall be adjusted by the applicable temperature factor, or C_t, as specified in NDS.

6.1.4 When connectors are installed in wood having a moisture content of greater than nineteen percent (19%), sixteen percent (16%) for engineered wood products, or where wet service conditions are expected over the life of the connector, the allowable loads must be adjusted by the wet service factor (C_M) specified in NDS.

LEGACY

Confidential Intellectual Property is protected by Defend Trade Secrets Act 2016, ©DrJ Engineering, LLC

6.2 *Uplift*

6.2.1 Allowable uplift values for various wood species are provided in **Table 2**.

Table 2. Allowable Uplift Loads Post for R80100L Post Base

Product	Fastener Specifications			Allowable Uplift Loads[1,2] (lb)		
				Wood Species (Specific Gravity)		
	Fastener Type	Fastener Size	Qty	SP (0.55)	DF-L (0.50)	HF/SPF (0.42)
R80100L Post Base	LBA Nail	0.157" x 2.36" (4 mm x 60 mm)	16[3] (8 per side)	2,075	2,075	1,965
		0.157" x 3.94" (4 mm x 100 mm)				
	16d Common Nail	0.162" x 3½" (4.1 mm x 89 mm)				

SI: 1 in = 25.4 mm, 1 lb = 4.45 N

1. Allowable loads shall be multiplied by the applicable adjustment factors specified in NDS Table 11.3.1.
2. No further increase for load duration is allowed.
3. See **Figure 6** for the holes used.

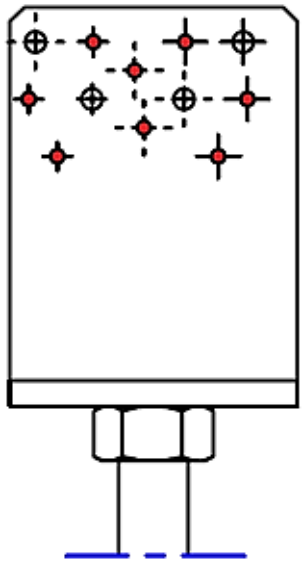

Figure 6. Nail Holes Used per Side for R80100L Post Base to Wood Post Connection

Confidential Intellectual Property is protected by Defend Trade Secrets Act 2016, ©DrJ Engineering, LLC

6.3 *Compression*

6.3.1 Allowable compression values for various pillar heights are provided in **Table 3**.

Table 3. Allowable Compressive Loads Post for R80100L Post Base

Product	Maximum Extension (in)[1]	Allowable Compressive Load (lb)
R80100L Post Base	8.82"	5,260

SI: 1 in = 25.4 mm, 1 lb = 4.45 N

1. Measured from the top of the base plate to the bottom of the top plate

6.4 *Corrosion*

6.4.1 R80100L Post Base is coated with one of two zinc-based coatings that are deemed to perform equal to or better than G185 for exterior use: *"DAC-Coat"* and *"Fe/Zn 25c"*.

6.5 Where the application falls outside of the performance evaluation, conditions of use and/or installation requirements set forth herein, alternative techniques shall be permitted in accordance with accepted engineering practice and experience. This includes but is not limited to the following areas of engineering: mechanics or materials, structural, building science and fire science.

7 Certified Performance[22]

7.1 All construction methods shall conform to accepted engineering practices to ensure durable, livable and safe construction and shall demonstrate acceptable workmanship reflecting journeyman quality of work of the various trades.[23]

7.2 The strength and rigidity of the component parts and/or the integrated structure shall be determined by engineering analysis or by suitable load tests to simulate the actual loads and conditions of application that occur.[24]

8 Installation

8.1 Installation shall comply with the approved construction documents, the manufacturer installation instructions, this report and the applicable building code.

8.2 In the event of a conflict between the manufacturer installation instructions and this report, the more restrictive shall govern.

8.3 *General*

8.3.1 Use all fasteners as specified in **Table 2** to achieve the full capacity.

8.3.2 The designer or specifier shall check the requirements and capacity of wood post and concrete (embedment, edge distance, and end distance) for resisting uplift and compressive loads.

8.4 *Installation Procedure*

8.4.1 Secure the base plate of the R80100L Post Base to the foundation with approved anchors.

8.4.2 Adjust to the required standoff height for the wood column.

8.4.3 Secure the wood column to the R80100L Post Base with the specified fasteners in this report.

LEGACY

Confidential Intellectual Property is protected by Defend Trade Secrets Act 2016, ©DrJ Engineering, LLC

9 Substantiating Data

9.1 Testing has been performed under the supervision of a professional engineer and/or under the requirements of ISO/IEC 17025 as follows:

9.1.1 Uplift testing in accordance with ANSI S913

9.1.2 Compression testing in accordance with EN 26891

9.1.3 Corrosion testing in accordance with EN ISO 9227, UNI EN ISO 3231, and UNI EN ISO 6270-2

9.2 Information contained herein may include the result of testing and/or data analysis by sources that are approved agencies, approved sources and/or RDPs. Accuracy of external test data and resulting analysis is relied upon.

9.3 Where pertinent, testing and/or engineering analysis are based upon provisions that have been codified into law through state or local adoption of regulations and standards. The developers of these regulations and standards are responsible for the reliability of published content. DrJ's engineering practice may use a regulation-adopted provision as the control. A regulation-endorsed control versus a simulation of the conditions of application to occur establishes a new material as being equivalent to the regulatory provision in terms of quality, strength, effectiveness, fire resistance, durability and safety.

9.4 The accuracy of the provisions provided herein may be reliant upon the published properties of raw materials, which are defined by the grade mark, grade stamp, mill certificate, or duly authenticated reports from approved agencies and/or approved sources provided by the supplier. These are presumed to be minimum properties and relied upon to be accurate. The reliability of DrJ's engineering practice, as contained in this Duly Authenticated Report, may be dependent upon published design properties by others.

9.5 Testing and engineering analysis: The strength, rigidity and/or general performance of component parts and/or the integrated structure are determined by suitable tests that simulate the actual conditions of application that occur and/or by accepted engineering practice and experience.[25]

9.6 Where additional condition of use and/or regulatory compliance information is required, please search for R80100L Post Base on the DrJ Certification website.

10 Findings

10.1 As outlined in **Section 6**, the R80100L Post Base has performance characteristics that were tested and/or meet applicable regulations and is suitable for use pursuant to its specified purpose.

10.2 When used and installed in accordance with this Duly Authenticated Report and the manufacturer installation instructions, R80100L Post Base shall be approved for the following applications:

10.2.1 Use where the design values listed in **Section 6** meet the requirements of the building design.

10.3 Unless exempt by state statute, when R80100L Post Base is to be used as a structural and/or building envelope component in the design of a specific building, the design shall be performed by an RDP.

10.4 Any application specific issues not addressed herein can be engineered by an RDP. Assistance with engineering is available from ROTHO BLAAS SRL.

10.5 IBC Section 104.11 (IRC Section R104.11 and IFC Section 104.10[26] are similar) in pertinent part states:

> **104.11 Alternative materials, design and methods of construction and equipment**. The provisions of this code are not intended to prevent the installation of any material or to prohibit any design or method of construction not specifically prescribed by this code. Where the alternative material, design or method of construction is not approved, the building official shall respond in writing, stating the reasons the alternative was not approved.

LEGACY

Confidential Intellectual Property is protected by Defend Trade Secrets Act 2016, ©DrJ Engineering, LLC

10.6 **Approved**:[27] Building regulations require that the building official shall accept Duly Authenticated Reports.[28]

10.6.1 An approved agency is *"approved"* when it is ANAB ISO/IEC 17065 accredited.

10.6.2 An approved source is *"approved"* when an RDP is properly licensed to transact engineering commerce.

10.6.3 Federal law, Title 18 US Code Section 242, requires that where the alternative product, material, service, design, assembly and/or method of construction is not approved, the building official shall respond in writing, stating the reasons why the alternative was not approved. Denial without written reason deprives a protected right to free and fair competition in the marketplace.

10.7 DrJ is a licensed engineering company, employs licensed RDPs and is an ANAB-Accredited Product Certification Body – Accreditation #1131.

10.8 Through the IAF Multilateral Agreements (MLA), this Duly Authenticated Report can be used to obtain product approval in any jurisdiction or country because all ANAB ISO/IEC 17065 Duly Authenticated Reports are equivalent.[29]

11 Conditions of Use

11.1 Material properties shall not fall outside the boundaries defined in **Section 6**.

11.2 As defined in **Section 6**, where material and/or engineering mechanics properties are created for load resisting design purposes, the resistance to the applied load shall not exceed the ability of the defined properties to resist those loads using the principles of accepted engineering practice.

11.3 As listed herein, R80100L Post Base shall not be used:

11.3.1 With any non-wood based columns, nor

11.3.2 With any wood columns that are smaller than nominal 6 x 6

11.4 When required by adopted legislation and enforced by the building official, also known as the authority having jurisdiction (AHJ) in which the project is to be constructed:

11.4.1 Any calculations incorporated into the construction documents shall conform to accepted engineering practice and, when prepared by an approved source, shall be approved when signed and sealed.

11.4.2 This report and the installation instructions shall be submitted at the time of permit application.

11.4.3 This innovative product has an internal quality control program and a third-party quality assurance program.

11.4.4 At a minimum, this innovative product shall be installed per **Section 8** of this report.

11.4.5 The review of this report by the AHJ shall comply with IBC Section 104 and IBC Section 105.4.

11.4.6 This innovative product has an internal quality control program and a third party quality assurance program in accordance with IBC Section 104.4, IBC Section 110.4, IBC Section 1703, IRC Section R104.4 and IRC Section R109.2.

11.4.7 The application of this innovative product in the context of this report is dependent upon the accuracy of the construction documents, implementation of installation instructions, inspection as required by IBC Section 110.3, IRC Section R109.2 and any other regulatory requirements that may apply.

11.5 The approval of this report by the AHJ shall comply with IBC Section 1707.1, where legislation states in part, "*the building official shall accept duly authenticated reports from approved agencies in respect to the quality and manner of use of new material or assemblies as provided for in Section 104.11*", all of IBC Section 104 and IBC Section 105.4.

11.6 Design loads shall be determined in accordance with the regulations adopted by the jurisdiction in which the project is to be constructed and/or by the building designer (i.e., owner or RDP).

11.7 The actual design, suitability and use of this report for any particular building, is the responsibility of the owner or the authorized agent of the owner.

LEGACY

Confidential Intellectual Property is protected by Defend Trade Secrets Act 2016, ©DrJ Engineering, LLC

12 Identification

12.1 The innovative product listed in **Section 1.1** is identified by a label on the board or packaging material bearing the manufacturer name, product name, this report number and other information to confirm code compliance.

12.2 Additional technical information can be found at www.rothoblaas.com.

13 Review Schedule

13.1 This report is subject to periodic review and revision. For the latest version, visit www.drjcertification.org.

13.2 For information on the status of this report, please contact DrJ Certification.

14 Approved for Use Pursuant to U.S. and International Legislation Defined in Appendix A

14.1 R80100L Post Base is included in this report published by an approved agency that is concerned with evaluation of products or services, maintains periodic inspection of the production of listed materials or periodic evaluation of services. This report states either that the material, product, or service meets recognized standards or has been tested and found suitable for a specified purpose. This report meets the legislative intent and definition of being acceptable to the AHJ.

LEGACY

Confidential Intellectual Property is protected by Defend Trade Secrets Act 2016, ©DrJ Engineering, LLC

Appendix A

1 Legislation that Authorizes AHJ Approval

1.1 **Fair Competition**: State legislatures have adopted Federal regulations for the examination and approval of building code referenced and alternative products, materials, designs, services, assemblies and/or methods of construction that:

1.1.1 Advance innovation,

1.1.2 Promote competition so all businesses have the opportunity to compete on price and quality in an open market on a level playing field unhampered by anticompetitive constraints, and

1.1.3 Benefit consumers through lower prices, better quality and greater choice.

1.2 **Adopted Legislation**: The following local, state and federal regulations affirmatively authorize this innovative product to be approved by AHJs, delegates of building departments and/or delegates of an agency of the federal government:

1.2.1 Interstate commerce is governed by the Federal Department of Justice to encourage the use of innovative products, materials, designs, services, assemblies and/or methods of construction. The goal is to "*protect economic freedom and opportunity by promoting free and fair competition in the marketplace*."

1.2.2 Title 18 US Code Section 242 affirms and regulates the right of individuals and businesses to freely and fairly have new products, materials, designs, services, assemblies and/or methods of construction approved for use in commerce. Disapproval of alternatives shall be based upon non-conformance with respect to specific provisions of adopted legislation and shall be provided in writing stating the reasons why the alternative was not approved, with reference to the specific legislation violated.

1.2.3 The federal government and each state have a public records act. In addition, each state also has legislation that mimics the federal Defend Trade Secrets Act 2016 (DTSA),[30] where providing test reports, engineering analysis and/or other related IP/TS is subject to prison of not more than ten years[31] and/or a $5,000,000 fine or 3 times the value of[32] the Intellectual Property (IP) and Trade Secrets (TS).

1.2.3.1 Compliance with public records and trade secret legislation requires approval through the use of Listings, certified reports, Technical Evaluation Reports, Duly Authenticated Reports and/or research reports prepared by approved agencies and/or approved sources.

1.2.4 For new materials[33] that are not specifically provided for in any regulation, the design strengths and permissible stresses shall be established by tests, where suitable load tests simulate the actual loads and conditions of application that occur.

1.2.5 The design strengths and permissible stresses of any structural material shall conform to the specifications and methods of design using accepted engineering practice.[34]

1.2.6 The commerce of approved sources (i.e., registered PEs) is regulated by professional engineering legislation. Professional engineering commerce shall always be approved by AHJs, except where there is evidence provided in writing, that specific legislation have been violated by an individual registered PE.

1.2.7 The AHJ shall accept Duly Authenticated Reports from approved agencies in respect to the quality and manner of use of new materials or assemblies as provided for in IBC Section 104.11.[35]

LEGACY

Confidential Intellectual Property is protected by Defend Trade Secrets Act 2016, ©DrJ Engineering, LLC

1.3 **Approved**[36] **by Los Angeles**: The Los Angeles Municipal Code (LAMC) states in pertinent part that the provisions of LAMC are not intended to prevent the use of any material, device, or method of construction not specifically prescribed by LAMC. The Department shall use Part III, Recognized Standards in addition to Part II, Uniform Building Code Standards of Division 35, Article 1, Chapter IX of the LAMC in evaluation of products for approval where such standard exists for the product or the material and may use other approved standards that apply. Whenever tests or certificates of any material or fabricated assembly are required by Chapter IX of the LAMC, such tests or certification shall be made by a testing agency approved by the Superintendent of Building to conduct such tests or provide such certifications. The testing agency shall publish the scope and limitation(s) of the listed material or fabricated assembly.[37] The Superintendent of Building Approved Testing Agency Roster is provided by the Los Angeles Department of Building and Safety (LADBS). The Center for Building Innovation (CBI) Certificate of Approval License is TA24945. Tests and certifications found in a DrJ Listing are LAMC approved. In addition, the Superintendent of Building shall accept Duly Authenticated Reports from approved agencies in respect to the quality and manner of use of new materials or assemblies as provided for in the California Building Code (CBC) Section 1707.1.[38]

1.4 **Approved by Chicago**: The Municipal Code of Chicago (MCC) states in pertinent part that an Approved Agency is a Nationally Recognized Testing Laboratory (NRTL) acting within its recognized scope and/or a certification body accredited by the American National Standards Institute (ANSI) acting within its accredited scope. Construction materials and test procedures shall conform to the applicable standards listed in the MCC. Sufficient technical data shall be submitted to the building official to substantiate the proposed use of any product, material, service, design, assembly and/or method of construction not specifically provided for in the MCC. This technical data shall consist of research reports from approved sources (i.e., MCC defined Approved Agencies).

1.5 **Approved by New York City**: The 2022 NYC Building Code (NYCBC) states in part that an approved agency shall be deemed[39] an approved testing agency via ISO/IEC 17025 accreditation, an approved inspection agency via ISO/IEC 17020 accreditation and an approved product evaluation agency via ISO/IEC 17065 accreditation. Accrediting agencies, other than federal agencies, must be members of an internationally recognized cooperation of laboratory and inspection accreditation bodies subject to a mutual recognition agreement[40] (i.e., ANAB, International Accreditation Forum (IAF), etc.).

1.6 **Approved by Florida**: Statewide approval of products, methods, or systems of construction shall be approved, without further evaluation by:

1.6.1 A certification mark or listing of an approved certification agency,

1.6.2 A test report from an approved testing laboratory,

1.6.3 A product evaluation report based upon testing or comparative or rational analysis, or a combination thereof, from an approved product evaluation entity, or

1.6.4 A product evaluation report based upon testing, comparative or rational analysis, or a combination thereof, developed, signed and sealed by a professional engineer or architect, licensed in Florida.

1.7 For local product approval, products or systems of construction shall demonstrate compliance with the structural wind load requirements of the Florida Building Code (FBC) through one of the following methods:

1.7.1 A certification mark, listing or label from a commission-approved certification agency indicating that the product complies with the code,

1.7.2 A test report from a commission-approved testing laboratory indicating that the product tested complies with the code,

1.7.3 A product-evaluation report based upon testing, comparative or rational analysis, or a combination thereof, from a commission-approved product evaluation entity which indicates that the product evaluated complies with the code,

LEGACY

Confidential Intellectual Property is protected by Defend Trade Secrets Act 2016, ©DrJ Engineering, LLC

1.7.4 A product-evaluation report or certification based upon testing or comparative or rational analysis, or a combination thereof, developed and signed and sealed by a Florida professional engineer or Florida registered architect, which indicates that the product complies with the code, or

1.7.5 A statewide product approval issued by the Florida Building Commission.

1.8 The Florida Department of Business and Professional Regulation (DBPR) website provides a listing of companies certified as a Product Evaluation Agency (i.e., EVLMiami 13692), a Product Certification Agency (i.e., CER10642) and as a Florida Registered Engineer (i.e., ANE13741).

1.9 **Approved by Miami-Dade County (i.e., Notice of Acceptance [NOA])**: A Florida statewide approval is an NOA. An NOA is a Florida local product approval. By Florida law, Miami-Dade County shall accept the statewide and local Florida Product Approval as provided for in Florida legislation 553.842 and 553.8425.

1.10 **Approved by New Jersey**: Pursuant to the 2018 Building Code of New Jersey in IBC Section 1707.1 General,[41] it states: "*In the absence of approved rules or other approved standards, the building official shall accept duly authenticated reports from approved agencies in respect to the quality and manner of use of new materials or assemblies as provided for in the administrative provisions of the Uniform Construction Code (N.J.A.C. 5:23)*".[42] Furthermore N.J.A.C 5:23-3.7 states: "*Municipal approvals of alternative materials, equipment, or methods of construction.*"

1.10.1 **Approvals**: Alternative materials, equipment, or methods of construction shall be approved by the appropriate subcode official provided the proposed design is satisfactory and that the materials, equipment, or methods of construction are suitable for the intended use and are at least the equivalent in quality, strength, effectiveness, fire resistance, durability and safety of those conforming with the requirements of the regulations.

1.10.1.1 A field evaluation label and report or letter issued by a nationally recognized testing laboratory verifying that the specific material, equipment, or method of construction meets the identified standards or has been tested and found to be suitable for the intended use, shall be accepted by the appropriate subcode official as meeting the requirements of the above.

1.10.1.2 Reports of engineering findings issued by nationally recognized evaluation service programs such as but not limited to, the Building Officials and Code Administrators (BOCA), the International Conference of Building Officials (ICBO), the Southern Building Code Congress International (SBCCI), the International Code Council (ICC) and the National Evaluation Service, Inc., shall be accepted by the appropriate subcode official as meeting the requirements of the above.

1.10.2 The New Jersey Department of Community Affairs has confirmed that technical evaluation reports, from any accredited entity listed by ANAB, meets the requirements of item the previous paragraph, given that the listed entities are no longer in existence and/or do not provide "*reports of engineering findings*".

1.11 **Approved by the Code of Federal Regulations Manufactured Home Construction and Safety Standards**: Pursuant to Title 24, Subtitle B, Chapter XX, Part 3282.14[43] and Part 3280,[44] the Department encourages innovation and the use of new technology in manufactured homes. The design and construction of a manufactured home shall conform to the provisions of Part 3282 and Part 3280 where key approval provisions in mandatory language follow:

1.11.1 "*All construction methods shall be in conformance with accepted engineering practices.*"

1.11.2 "*The strength and rigidity of the component parts and/or the integrated structure shall be determined by engineering analysis or by suitable load tests to simulate the actual loads and conditions of application that occur.*"

1.11.3 "*The design stresses of all materials shall conform to accepted engineering practice.*"

LEGACY

Confidential Intellectual Property is protected by Defend Trade Secrets Act 2016, ©DrJ Engineering, LLC

1.12 **Approval by US, Local and State Jurisdictions in Genera**l: In all other local and state jurisdictions, the adopted building code legislation states in pertinent part that:

1.12.1 For new materials that are not specifically provided for in this code, the design strengths and permissible stresses shall be established by tests.[45]

1.12.2 For innovative alternatives and/or methods of construction, the building official shall accept duly authenticated reports from approved agencies with respect to the quality and manner of use of new materials or assemblies.[46]

1.12.2.1 An approved agency is *"approved"* when it is ANAB ISO/IEC 17065 accredited. DrJ Engineering, LLC (DrJ) is in the ANAB directory.

1.12.2.2 An approved source is *"approved"* when an RDP is properly licensed to transact engineering commerce. The regulatory authority governing approved sources is the state legislature via its professional engineering regulations.[47]

1.12.3 The design strengths and permissible stresses of any structural material…shall conform to the specifications and methods of design of accepted engineering practice performed by an approved source.[48]

1.13 **Approval by International Jurisdictions**: The USMCA and GATT agreements provide for approval of innovative materials, designs, services and/or methods of construction through the Agreement on Technical Barriers to Trade and the IAF Multilateral Recognition Arrangement (MLA), where these agreements:

1.13.1 State that conformity assessment procedures (i.e., ISO/IEC 17020, 17025, 17065, etc.) are prepared, adopted and applied so as to grant access for suppliers of like products originating in the territories of other Members under conditions no less favourable than those accorded to suppliers of like products of national origin or originating in any other country, in a comparable situation.

1.13.2 **Approved**: The purpose of the MLA is to ensure mutual recognition of accredited certification and validation/verification statements between signatories to the MLA and subsequently, acceptance of accredited certification and validation/verification statements in many markets based on one accreditation for the timely approval of innovative materials, designs, services and/or methods of construction.

1.13.3 ANAB is an IAF-MLA signatory where recognition of certificates, validation and verification statements issued by conformity assessment bodies accredited by all other signatories of the IAF MLA, with the appropriate scope, shall be approved.[49]

1.13.4 Therefore, all ANAB ISO/IEC 17065 Duly Authenticated Reports are approval equivalent.[50]

1.14 Approval equity is a fundamental commercial and legal principle.[51]

LEGACY

Confidential Intellectual Property is protected by Defend Trade Secrets Act 2016, ©DrJ Engineering, LLC

Issue Date: January 20, 2025
Subject to Renewal: January 8, 2026

FBC Supplement to Report Number 2406-121

REPORT HOLDER: ROTHO BLAAS SRL

1 Evaluation Subject

1.15 R80100L Post Base

2 Purpose and Scope

2.1 Purpose

2.1.1 The purpose of this Report Supplement is to show R80100L Post Base, recognized in Report Number 2406-121, has also been evaluated for compliance with the codes listed below as adopted by the Florida Building Commission.

2.2 *Applicable Code Editions*

2.2.1 *FBC-B—20, 23: Florida Building Code – Building (FL 47259)*

2.2.2 FBC-R—20, 23: Florida Building Code – Residential (FL 47259)

3 Conclusions

3.1 R80100L Post Base, described in Report Number 2406-121, complies with the FBC-B and FBC-R and is subject to the conditions of use described in this supplement.

3.2 Where there are variations between the IBC and IRC and the FBC-B and FBC-R applicable to this report, they are listed here:

3.2.1 FBC-B Section 104.4 and Section 110.4 are reserved.

3.2.2 FBC-R Section R104 and Section R109 are reserved.

4 Conditions of Use

4.1 R80100L Post Base, described in Report Number 2406-121, must comply with all of the following conditions:

4.1.1 All applicable sections in Report Number 2406-121.

4.1.2 The design, installation, and inspections are in accordance with additional requirements of FBC-B Chapter 16 and Chapter 17, as applicable.

LEGACY

Confidential Intellectual Property is protected by Defend Trade Secrets Act 2016, ©DrJ Engineering, LLC

Notes

1 For more information, visit www.drjcertification.org or call us at 608-310-6748.

2 https://up.codes/viewer/wyoming/ibc-2021/chapter/17/special-inspections-and-tests#1702

3 Alternative Materials, Design and Methods of Construction and Equipment: The provisions of any regulation code are not intended to prevent the installation of any material or to prohibit any design or method of construction not specifically prescribed by a regulation. Please review https://www.justice.gov/atr/mission and https://up.codes/viewer/colorado/ibc-2021/chapter/1/scope-and-administration#104.11

4 https://up.codes/viewer/wyoming/ibc-2021/chapter/17/special-inspections-and-tests#1706:~:text=the%20design%20strengths%20and%20permissible%20stresses%20shall%20be%20established%20by%20tests%20as

5 The design strengths and permissible stresses of any structural material shall conform to the specifications and methods of design of accepted engineering practice. https://up.codes/viewer/wyoming/ibc-2021/chapter/17/special-inspections-and-tests#1706:~:text=shall%20conform%20to%20the%20specifications%20and%20methods%20of%20design%20of%20accepted%20engineering%20practice

6 https://up.codes/viewer/wyoming/ibc-2021/chapter/17/special-inspections-and-tests#1707.1:~:text=the%20building%20official%20shall%20accept%20duly%20authenticated%20reports%20from%20approved%20agencies

7 https://up.codes/viewer/wyoming/ibc-2021/chapter/17/special-inspections-and-tests#1703.4.2

8 https://up.codes/viewer/wyoming/ibc-2021/chapter/2/definitions#approved_agency

9 https://up.codes/viewer/wyoming/ibc-2021/chapter/2/definitions#approved_source

10 https://www.law.cornell.edu/uscode/text/18/1832 (b) Any organization that commits any offense described in subsection (a) shall be fined not more than the greater of $5,000,000 or 3 times the value of the stolen trade secret to the organization, including expenses for research and design and other costs of reproducing the trade secret that the organization has thereby avoided. The federal government and each state have a public records act. To follow DTSA and comply state public records and trade secret legislation requires approval through ANAB ISO/IEC 17065 accredited certification bodies or approved sources. For more information, please review this website: Intellectual Property and Trade Secrets.

11 https://www.nspe.org/resources/issues-and-advocacy/professional-policies-and-position-statements/regulation-professional AND https://apassociation.org/list-of-engineering-boards-in-each-state-archive/

12 https://www.cbitest.com/accreditation/

13 https://up.codes/viewer/colorado/ibc-2021/chapter/1/scope-and-administration#104:~:text=to%20enforce%20the%20provisions%20of%20this%20code

14 https://up.codes/viewer/colorado/ibc-2021/chapter/1/scope-and-administration#104.11:~:text=Where%20the%20alternative%20material%2C%20design%20or%20method%20of%20construction%20is%20not%20approved%2C%20the%20building%20official%20shall%20respond%20in%20writing%2C%20stating%20the%20reasons%20why%20the%20alternative%20was%20not%20approved AND https://up.codes/viewer/colorado/ibc-2021/chapter/1/scope-and-administration#105.3.1:~:text=If%20the%20application%20or%20the%20construction%20documents%20do%20not%20conform%20to%20the%20requirements%20of%20pertinent%20laws%2C%20the%20building%20official%20shall%20reject%20such%20application%20in%20writing%2C%20stating%20the%20reasons%20therefore

15 https://up.codes/viewer/colorado/ibc-2021/chapter/17/special-inspections-and-tests#1707.1:~:text=the%20building%20official%20shall%20accept%20duly%20authenticated%20reports%20from%20approved%20agencies%20in%20respect%20to%20the%20quality%20and%20manner%20of%20use%20of%20new%20materials%20or%20assemblies%20as%20provided%20for%20in%20Section%20104.11

16 https://iaf.nu/en/about-iaf-mla/#:~:text=it%20is%20required%20to%20recognise%20certificates%20and%20validation%20and%20verification%20statements%20issued%20by%20conformity%20assessment%20bodies%20accredited%20by%20all%20other%20signatories%20of%20the%20IAF%20MLA%2C%20with%20the%20appropriate%20scope

17 True for all ANAB accredited product evaluation agencies and all International Trade Agreements.

18 https://www.justice.gov/crt/deprivation-rights-under-color-law AND https://www.justice.gov/atr/mission

19 Unless otherwise noted, all references in this Listing are from the 2021 version of the codes and the standards referenced therein. This material, product, design, service and/or method of construction also complies with the 2000-2021 versions of the referenced codes and the standards referenced therein.

20 All references to the FBC-B and FBC-R are the same as the 2021 IBC and 2021 IRC unless otherwise noted in the Florida Supplement at the end of this report.

21 https://www.ecfr.gov/current/title-24/subtitle-B/chapter-XX/part-3280#p-3280.2(Listed%20or%20certified); https://up.codes/viewer/colorado/ibc-2021/chapter/2/definitions#listed AND https://up.codes/viewer/colorado/ibc-2021/chapter/2/definitions#labeled

22 https://up.codes/viewer/colorado/ibc-2021/chapter/17/special-inspections-and-tests#1703.4

23 https://www.ecfr.gov/current/title-24/subtitle-B/chapter-XX/part-3280#:~:text=All%20construction%20methods%20shall%20be%20in%20conformance%20with%20accepted%20engineering%20practices%20to%20insure%20durable%2C%20livable%2C%20and%20safe%20housing%20and%20shall%20demonstrate%20acceptable%20workmanship%20reflecting%20journeyman%20quality%20of%20work%20of%20the%20various%20trades

24 https://www.ecfr.gov/current/title-24/subtitle-B/chapter-XX/part-3280#:~:text=The%20strength%20and%20rigidity%20of%20the%20component%20parts%20and/or%20the%20integrated%20structure%20shall%20be%20determined%20by%20engineering%20analysis%20or%20by%20suitable%20load%20tests%20to%20simulate%20the%20actual%20loads%20and%20conditions%20of%20application%20that%20occur

25 See Code of Federal Regulations (CFR) Title 24 Subtitle B Chapter XX Part 3280 for definition.

26 2018 IFC Section 104.9

27 Approved is an adjective that modifies the noun after it. For example, Approved Agency means that the Agency is accepted officially as being suitable in a particular situation. This example conforms to IBC/IRC/IFC Section 201.4 where the building code authorizes sentences to have an ordinarily accepted meaning such as the context implies.

28 https://up.codes/viewer/wyoming/ibc-2021/chapter/17/special-inspections-and-tests#1707.1

29 Multilateral approval is true for all ANAB accredited product evaluation agencies and all International Trade Agreements.

30 http://www.drjengineering.org/AppendixC AND https://www.drjcertification.org/cornell-2016-protection-trade-secrets

31 https://www.law.cornell.edu/uscode/text/18/1832#:~:text=imprisoned%20not%20more%20than%2010%20years

32 https://www.law.cornell.edu/uscode/text/18/1832#:~:text=Any%20organization%20that,has%20thereby%20avoided

LEGACY

Confidential Intellectual Property is protected by Defend Trade Secrets Act 2016, ©DrJ Engineering, LLC

33 https://up.codes/viewer/wyoming/ibc-2021/chapter/17/special-inspections-and-tests#1706.2
34 IBC 2021, Section 1706.1 Conformance to Standards
35 IBC 2021, Section 1707 Alternative Test Procedure, 1707.1 General
36 See Section 10 for the distilled building code definition of **Approved**
37 Los Angeles Municipal Code, SEC. 98.0503. TESTING AGENCIES
38 https://up.codes/viewer/california/ca-building-code-2022/chapter/17/special-inspections-and-tests#1707.1
39 New York City, The Rules of the City of New York, § 101-07 Approved Agencies
40 New York City, The Rules of the City of New York, § 101-07 Approved Agencies
41 https://up.codes/viewer/new_jersey/ibc-2018/chapter/17/special-inspections-and-tests#1707.1
42 https://www.nj.gov/dca/divisions/codes/codreg/ucc.html
43 https://www.ecfr.gov/current/title-24/subtitle-B/chapter-XX/part-3282/subpart-A/section-3282.14
44 https://www.ecfr.gov/current/title-24/subtitle-B/chapter-XX/part-3280
45 IBC 2021, Section 1706 Design Strengths of Materials, 1706.2 New Materials. Adopted law pursuant to IBC model code language 1706.2.
46 IBC 2021, Section 1707 Alternative Test Procedure, 1707.1 General. Adopted law pursuant to IBC model code language 1707.1.
47 https://www.nspe.org/resources/issues-and-advocacy/professional-policies-and-position-statements/regulation-professional AND https://apassociation.org/list-of-engineering-boards-in-each-state-archive/
48 IBC 2021, Section 1706 Design Strengths of Materials, Section 1706.1 Conformance to Standards Adopted law pursuant to IBC model code language 1706.1.
49 https://iaf.nu/en/about-iaf-mla/#:~:text=it%20is%20required%20to%20recognise%20certificates%20and%20validation%20and%20verification%20statements%20issued%20by%20conformity%20assessment%20bodies%20accredited%20by%20all%20other%20signatories%20of%20the%20IAF%20MLA%2C%20with%20the%20appropriate%20scope
50 True for all ANAB accredited product evaluation agencies and all International Trade Agreements.
51 https://www.justice.gov/crt/deprivation-rights-under-color-law AND https://www.justice.gov/atr/mission

LEGACY