Listing and Technical Evaluation Report™

A Duly Authenticated Report from an Approved Agency

Report No: 2302-01

Issue Date: November 20, 2023

Revision Date: October 1, 2026

Subject to Renewal: October 1, 2026

Use of CSP Homes Concrete Structural Steel Insulated Interlocking Plug-N-Play Panels

Trade Secret Report Holder:

CSP Homes, Inc.

Phone: 213-277-4663 (213-CSP-Home) Website: csp.homes Email: info@csp.homes

CSI Designations:

DIVISION: 03 00 00 - CONCRETE

DIVISION: 07 00 00 - THERMAL AND MOISTURE PROTECTION

Section: 07 42 00 - Wall Panels

Section: 07 42 13 - Metal Wall Panels

Section: 07 42 13.19 - Insulated Metal Wall Panels

Section: 07 42 13.23 - Metal Composite Material Wall Panels

Section: 07 42 43 - Composite Wall Panels

Section: 07 48 00 - Exterior Wall Assemblies

1 Innovative Product Evaluated[1]

1.1 Concrete Structural Steel Insulated Interlocking Plug-N-Play Panels (C-SIP)

2 Product Description and Materials

2.1 C-SIP are factory-assembled, load-bearing, insulated exterior and interior wall panels composed of a patented aerated concrete foam insulation, branded as Foam-Crete, enclosed within a 19-gauge (1 mm) steel frame (Q235/A36 Hot-Dipped Galvanized) and sheathed with high-density, $^{3}/_{8}$" thick cement fiber boards on both the internal and external faces.

2.1.1 Steel frame has a minimum yield strength, F_y, of 34 ksi (235 MPa) and a minimum ultimate tensile strength, F_u, of 53 ksi (370 MPa).

2.1.2 The steel frame has an additional internal bracing system comprised of 24-gauge, $^{19}/_{32}$" x $^{19}/_{32}$" (0.7 mm thick, 15 mm x 15 mm) square tubes. Where walls exceed 8' tall (2,440 mm), 19-gauge, 1" x 1" (1 mm thick, 25 mm x 25 mm) angle steel members are to be used to support the butt-jointed cement fiberboards on both sides of the panel.

2.1.3 Wall panels are available in nominal 4" and 6" thicknesses.

2.1.4 Each wall panel measures approximately 2' (610 mm) in width, and comes in various heights up to 16.4' (5 m).

LEGACY

Information contained in this report was developed using report holder's confidential intellectual property (IP) and trade secrets (TS), which is protected by Defend Trade Secrets Act 2016, © DrJ Engineering, LLC

2.2 The innovative product evaluated in this report is shown in **Figure 1**.



Figure 1. C-SIP Used in the CSP Insulated Interlocking Plug-N-Play Panel System

2.3 *Product Components*

2.3.1 *Steel Frame:*

2.3.1.1 Steel is specified as Q235/A36 hot-dip galvanized steel, 19-gauge (1 mm) thick.

2.3.1.2 A typical steel frame consists of:

2.3.1.2.1 1 female steel member,

2.3.1.2.2 1 male steel member,

2.3.1.2.3 2 arch steel members,

2.3.1.2.4 2 angle steel members, and

2.3.1.2.5 6 square tubes.

2.3.1.3 Steel member cross sections are displayed in **Figure 2** through **Figure 7**.

LEGACY

Information contained in this report was developed using report holder's confidential intellectual property (IP) and trade secrets (TS), which is protected by Defend Trade Secrets Act 2016, © DrJ Engineering, LLC

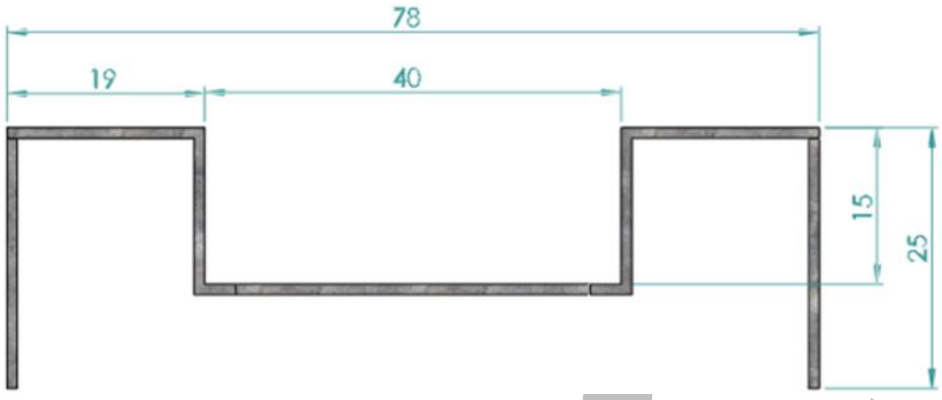

Figure 2. Female Steel Profile for 3¾" (96 mm) Thick Wall Panels

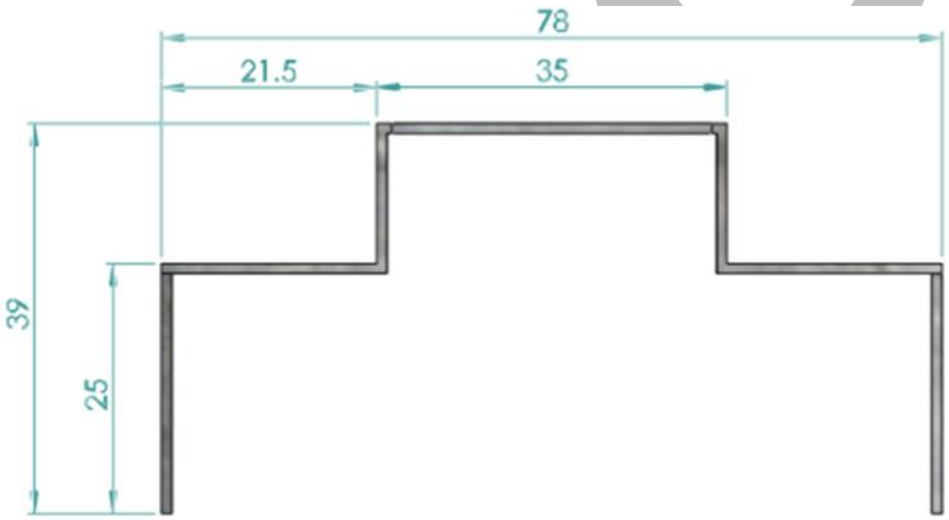

Figure 3. Male Steel Profile for 3¾" (96 mm) Thick Wall Panels

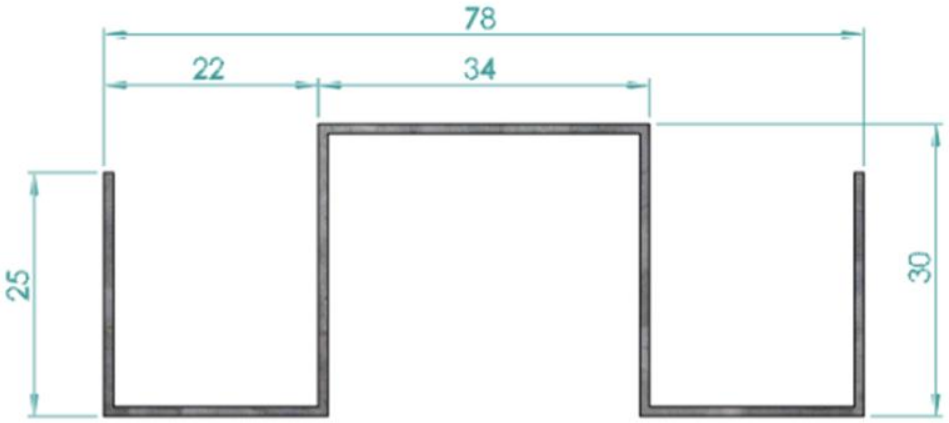

Figure 4. Arch Steel Profile for 3¾" (96 mm) Thick Wall Panels

Information contained in this report was developed using report holder's confidential intellectual property (IP) and trade secrets (TS), which is protected by Defend Trade Secrets Act 2016, © DrJ Engineering, LLC

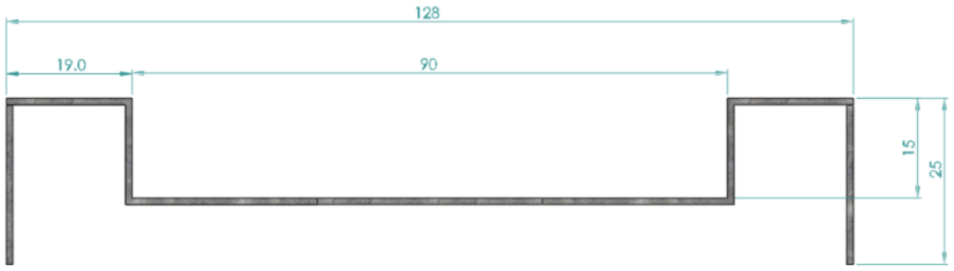

Figure 5. Female Steel Profile for 5 3/4" (146 mm) Thick Wall Panels

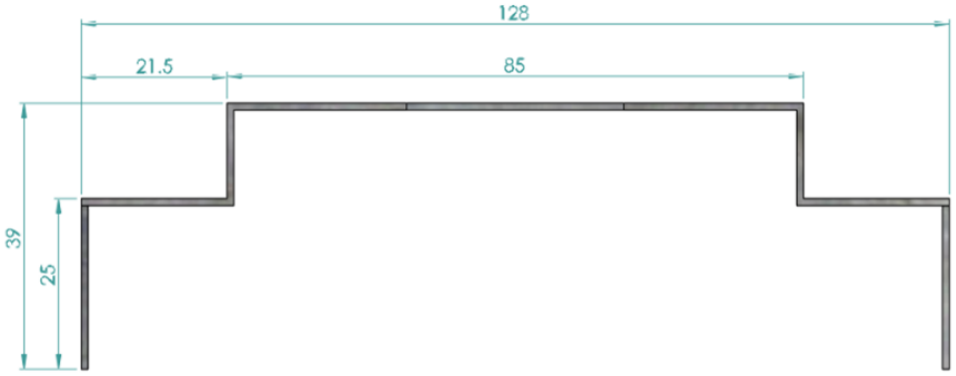

Figure 6. Male Steel Profile for 5 3/4" (146 mm) Thick Wall Panels

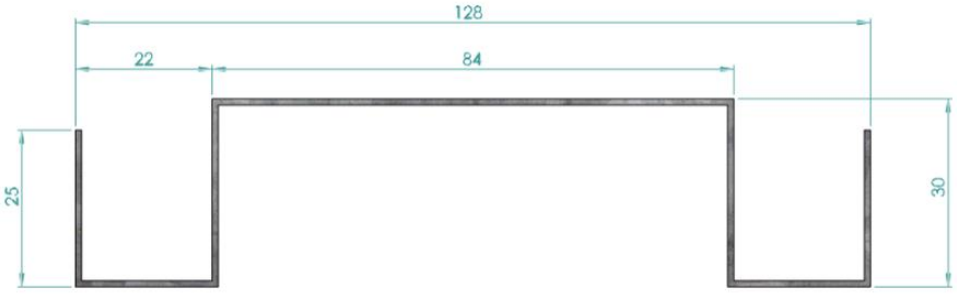

Figure 7. Arch Steel for 5 3/4" (146 mm) Thick Wall Panels

2.3.2 *Fiber Cement Board:*

2.3.2.1 Nominal thickness: 3/8" (9 mm)

2.3.2.2 Boards are fastened to the steel frame with #6 x 1" (3.5 mm x 25 mm) self-tapping drywall screws, spaced approximately 24" (610 mm) o.c., along vertical panel edges and 6" (152 mm) along horizontal panel edges. Fasteners are located 3/8" (9.5 mm) from the panel edges.

2.4 *Panel-to-Panel Connection*

2.4.1 A 14-gauge, 1 3/16" x 1 3/16" (2 mm thick, 30 mm x 30 mm) square tube is fitted into the groove of the top and bottom arch steel members of the panels that are being joined.

2.4.2 The square tube (steel slot track) is fastened to the top and bottom arch steel members with #12 x 3" self-tapping screws spaced approximately 6" o.c. staggered front-to-back for each wall panel.

Information contained in this report was developed using report holder's confidential intellectual property (IP) and trade secrets (TS), which is protected by Defend Trade Secrets Act 2016, © DrJ Engineering, LLC

2.5 *Material Availability*

2.5.1 *Standard Product Thickness:*

2.5.1.1 $3^{3}/_{4}$" (96 mm)

2.5.1.2 $5^{3}/_{4}$" (146 mm)

2.5.2 *Standard Product Width:*

2.5.2.1 $23^{5}/_{8}$" (600 mm)

2.5.2.1.1 Width measurement applies only to the net face and excludes the tongue of the male end.

2.5.3 *Standard Product Height:*

2.5.3.1 122" (3,100 mm) to $141^{3}/_{4}$" (3,600 mm)

2.6 As needed, review material properties for design in **Section 6** and the regulatory evaluation in **Section 8**.

3 Definitions[2]

3.1 New Materials[3] are defined as building materials, equipment, appliances, systems, or methods of construction, not provided for by prescriptive and/or legislatively adopted regulations, known as alternative materials.[4] The design strength and permissible stresses shall be established by tests[5] and/or engineering analysis.[6]

3.2 Duly authenticated reports[7] and research reports[8] are test reports and related engineering evaluations that are written by an approved agency[9] and/or an approved source.[10]

3.2.1 These reports utilize intellectual property and/or trade secrets to create public domain material properties for commercial end-use.

3.2.1.1 This report protects confidential Intellectual Property and trade secretes under the regulation, 18.US.Code.90, also known as Defend Trade Secrets Act of 2016 (DTSA).[11]

3.3 An approved agency is *"approved"* when it is ANAB ISO/IEC 17065 accredited. DrJ Engineering, LLC (DrJ) is accredited and listed in the ANAB directory.

3.4 An approved source is *"approved"* when a professional engineer (i.e., Registered Design Professional, hereinafter RDP) is properly licensed to transact engineering commerce. The regulatory authority governing approved sources is the state legislature via its professional engineering regulations.[12]

3.5 Testing and/or inspections conducted for this duly authenticated report were performed by an ISO/IEC 17025 accredited testing laboratory, an ISO/IEC 17020 accredited inspection body, and/or a licensed RDP.

3.5.1 The Center for Building Innovation (CBI) is ANAB[13] ISO/IEC 17025 and ISO/IEC 17020 accredited.

3.6 The regulatory authority shall enforce[14] the specific provisions of each legislatively adopted regulation. If there is a non-conformance, the specific regulatory section and language of the non-conformance shall be provided in writing[15] stating the nonconformance and the path to its cure.

3.7 The regulatory authority shall accept duly authenticated reports from an approved agency and/or an approved source with respect to the quality and manner of use of new materials or assemblies as provided for in regulations regarding the use of alternative materials, designs, or methods of construction.[16]

3.8 ANAB is an International Accreditation Forum (IAF) Multilateral Recognition Arrangement (MLA) signatory. Therefore, recognition of certificates and validation statements issued by conformity assessment bodies accredited by all other signatories of the IAF MLA with the appropriate scope shall be approved.[17] Thus, all ANAB ISO/IEC 17065 duly authenticated reports are approval equivalent,[18] and can be used in any country that is an MLA signatory found at this link: https://iaf.nu/en/recognised-abs/

3.9 Approval equity is a fundamental commercial and legal principle.[19]

LEGACY

Information contained in this report was developed using report holder's confidential intellectual property (IP) and trade secrets (TS), which is protected by Defend Trade Secrets Act 2016, © DrJ Engineering, LLC

4 Applicable Local, State, and Federal Approvals; Standards; Regulations[20]

4.1 *Local, State, and Federal*

4.1.1 Approved in all local jurisdictions pursuant to ISO/IEC 17065 duly authenticated report use, which includes, but is not limited to, the following featured local jurisdictions: Austin, Baltimore, Broward County, Chicago, Clark County, Dade County, Dallas, Detroit, Denver, DuPage County, Fort Worth, Houston, Kansas City, King County, Knoxville, Las Vegas, Los Angeles City, Los Angeles County, Miami, Nashville, New York City, Omaha, Philadelphia, Phoenix, Portland, San Antonio, San Diego, San Jose, San Francisco, Seattle, Sioux Falls, South Holland, Texas Department of Insurance, and Wichita.[21]

4.1.2 Approved in all state jurisdictions pursuant to ISO/IEC 17065 duly authenticated report use, which includes, but is not limited to, the following featured states: California, Florida, New Jersey, Oregon, New York, Texas, Washington, and Wisconsin.[22]

4.1.3 Approved by the Code of Federal Regulations Manufactured Home Construction: Pursuant to Title 24, Subtitle B, Chapter XX, Part 3282.14[23] and Part 3280[24] pursuant to the use of ISO/IEC 17065 duly authenticated reports.

4.1.4 Approved means complying with the requirements of local, state, or federal legislation.

4.2 *Standards*

4.2.1 *ACI 318: Building Code Requirements for Structural Concrete*

4.2.2 *ASCE/SEI 7: Minimum Design Loads and Associated Criteria for Buildings and Other Structures*

4.2.3 *ASTM E72: Standard Test Methods of Conducting Strength Tests of Panels for Building Construction*

4.2.4 *ASTM E119: Standard Test Methods for Fire Tests of Building Construction and Materials*

4.2.5 *ASTM E136: Standard Test Method for Assessing Combustibility of Materials Using a Vertical Tube Furnace at 750 °C*

4.2.6 *ASTM E330: Standard Test Method for Structural Performance of Exterior Windows, Doors, Skylights and Curtain Walls by Uniform Static Air Pressure Difference*

4.2.7 *ASTM E2126: Standard Test Methods for Cyclic (Reversed) Load Test for Shear Resistance of Vertical Elements of the Lateral Force Resisting Systems for Buildings*

4.2.8 *EN 12089-1997: Thermal Insulating Products for Building Applications - Determination of Bending Behavior*

4.2.9 *EN 12667-2001: Thermal Performance of Building Materials and Products - Determination of Thermal Resistance by Means of Guarded Hot Plate and Heat Flow Meter Methods - Products of High and Medium Thermal Resistance*

4.2.10 *EN 13501-1: Fire Test for Building Materials*

4.2.11 *EN ISO 1182-2010: Reaction to fire tests for products — Non-combustibility test*

4.2.12 *EN ISO 1716-2010: Reaction to fire tests for products — Determination of the gross heat of combustion (calorific value)*

4.2.13 *GB/T 23451-2009: Light Weight Panels for Partition Wall Used in Buildings*

4.2.14 *ISO 140-3-1995/A1-2004: Acoustics — Measurement of sound insulation in buildings and of building elements — Part 3: Laboratory measurements of airborne sound insulation of building elements*

4.2.15 *ISO 717-1-1996/A1-2006: Acoustics - Rating of sound insulation in buildings and of building elements - Part 1: Airborne sound insulation*

4.2.16 *SANS 10177-2: Fire Testing of Materials, Components and Elements Used in Buildings Part 2: Fire Resistance Test for Building Elements*

LEGACY

Information contained in this report was developed using report holder's confidential intellectual property (IP) and trade secrets (TS), which is protected by Defend Trade Secrets Act 2016, © DrJ Engineering, LLC

4.3 Structural performance for shear wall assemblies used as lateral force resisting systems in Seismic Design Categories A through F have been tested and evaluated in accordance with the following standards:

4.3.1 *ASCE/SEI 7: Minimum Design Loads and Associated Criteria for Buildings and Other Structures*

4.3.2 *ASTM D7989: Standard Practice for Demonstrating Equivalent In-Plane Lateral Seismic Performance to Wood-Frame Shear Walls Sheathed with Wood Structural Panels*

4.3.2.1 ASTM D7989 is accepted engineering practice used to establish Seismic Design Coefficients (SDC).

4.3.2.2 Tested data generated by ISO/IEC 17025 approved agencies and/or professional engineers, which use ASTM D7989 as their basis, are defined as intellectual property and/or trade secrets.

4.3.2.3 All professional engineering evaluations are defined as an independent design review (i.e., listings, certified reports, duly authenticated reports from approved agencies, and/or research reports, are prepared independently by approved agencies and/or approved sources, when signed and sealed by licensed professional engineer pursuant to registration law.

4.3.3 *ASTM E564: Standard Practice for Static Load Test for Shear Resistance of Framed Walls for Buildings*

4.3.4 *ASTM E2126: Standard Test Methods for Cyclic (Reversed) Load Test for Shear Resistance of Vertical Elements of the Lateral Force Resisting Systems for Buildings*

4.4 *Regulations*

4.4.1 *IBC – 18, 21, 24: International Building Code®*

4.4.2 *IRC – 18, 21, 24: International Residential Code®*

4.4.3 *IECC – 18, 21, 24: International Energy Conservation Code®*

4.4.4 *WUIC – 18, 21, 24: Wildland Urban Interface Code®*

4.4.5 *FBC-B – 20, 23: Florida Building Code[25] - Building (FL 44554)*

4.4.6 *FBC-R – 20, 23: Florida Building Code[25] – Residential (FL 44554)*

4.4.7 *CBC-R – 19, 22: California Building Standards Code (California Code of Regulations, Title 24)*

5 Listed[26]

5.1 Equipment, materials, products, or services included in a List published by a nationally recognized testing laboratory (i.e., CBI), an approved agency (i.e., CBI and DrJ), and/or and approved source (i.e., DrJ), or other organization(s) concerned with product evaluation (i.e., DrJ), that maintains periodic inspection (i.e., CBI) of production of listed equipment or materials, and whose listing states either that the equipment or material meets nationally recognized standards or has been tested and found suitable for use in a specified manner.

6 Tabulated Properties Generated from Nationally Recognized Standards

6.1 C-SIP are used in applications as:

6.1.1 Walls in buildings constructed in accordance with the IRC and IBC

6.1.2 Structural wall panels to provide lateral load resistance (wind and seismic) for buildings

6.1.3 Structural wall panels in buildings constructed in accordance with the IBC requirements for Type I-V construction

6.1.4 Structural wall panels to provide resistance to transverse loads for wall assemblies

6.1.5 Structural wall panels to provide resistance to compression loads for wall assemblies

LEGACY

Information contained in this report was developed using report holder's confidential intellectual property (IP) and trade secrets (TS), which is protected by Defend Trade Secrets Act 2016, © DrJ Engineering, LLC

6.2 *Structural Applications*

6.2.1 Except as otherwise described in this report, C-SIP shall be installed in accordance with the applicable building codes listed in **Section 4**, using the provisions set forth herein for the design and installation.

6.2.2 Anchorage for in-plane shear shall be provided to transfer the induced shear force into and out of each shear wall.

6.2.2.1 For wind and seismic design, anchor bolt spacing shall not exceed 20" o.c.

6.2.3 The maximum aspect ratio for full height walls braced with 5.75" (146 mm) C-SIP shall be 1.8:1.

6.2.4 Fastener type and spacing shall be per the applicable table of this report and **Section 9**. Fasteners shall be installed with the head in contact with the face of the board.

6.2.5 Where the application exceeds the limitations set forth herein, design shall be permitted in accordance with accepted engineering procedures, experience, and technical judgment.

6.3 *Simplified IRC Bracing Provisions*

6.3.1 5.75" (146 mm) C-SIP wall panels are permitted to be used in accordance with the IRC simplified bracing method as prescribed in IRC Section R602.12, as modified by **Table 1**.

6.3.1.1 A single 5.75" (146 mm) C-SIP wall panel bracing unit is nominally 24" wide.

6.3.2 Unless stated otherwise in this report, and where applicable, all provisions of the IRC simplified bracing method shall be met when using **Table 1**, which replaces IRC Table R602.12.4.

Table 1. Minimum Number of 5.75" (146 mm) C-SIP Panels on Each Side of the Circumscribed Rectangle[1,2,3,4,5,6]

Ultimate Design Wind Speed (mph)	Story Level	Eave to Ridge Height (ft)	Minimum Number of Bracing Units Required (Long Side)[7]						Minimum Number of Bracing Units Required (Short Side)[7]					
			Length of Short Side						Length of Long Side					
			10	20	30	40	50	60	10	20	30	40	50	60
115	One Story or Top of Two or Three Story	10	1	2	3	4	5	5	1	2	3	4	5	5
	First of Two Story or Second of Three Story		2	4	5	7	8	10	2	4	5	7	8	10
	First of Three Story		3	6	8	10	12	14	3	6	8	10	12	14
	One Story or Top of Two or Three Story	15	1	3	4	5	7	7	1	3	4	5	7	7
	First of Two Story or Second of Three Story		2	5	6	8	9	12	2	5	6	8	9	12
	First of Three Story		3	7	9	11	13	15	3	7	9	11	13	15

LEGACY

Information contained in this report was developed using report holder's confidential intellectual property (IP) and trade secrets (TS), which is protected by Defend Trade Secrets Act 2016, © DrJ Engineering, LLC

Table 1. Minimum Number of 5.75" (146 mm) C-SIP Panels on Each Side of the Circumscribed Rectangle[1,2,3,4,5,6]

Ultimate Design Wind Speed (mph)	Story Level	Eave to Ridge Height (ft)	Minimum Number of Bracing Units Required (Long Side)[7]						Minimum Number of Bracing Units Required (Short Side)[7]					
			Length of Short Side						Length of Long Side					
			10	20	30	40	50	60	10	20	30	40	50	60
130	One Story or Top of Two or Three Story	10	2	3	4	5	6	7	2	3	4	5	6	7
	First of Two Story or Second of Three Story		3	5	7	9	11	12	3	5	7	9	11	12
	First of Three Story		4	7	10	12	15	18	4	7	10	12	15	18
	One Story or Top of Two or Three Story	15	3	4	5	7	8	9	3	4	5	7	8	9
	First of Two Story or Second of Three Story		3	6	8	10	13	14	3	6	8	10	13	14
	First of Three Story		4	8	11	13	17	20	4	8	11	13	17	20

SI: 1 in = 25.4 mm, 1 mph = 1.61 km/h

1. This simplified bracing table is based on the provisions of IRC Section R602.12. All provisions therein shall be observed, except that this table shall replace IRC Table R602.12.4, and full-height C-SIP wall panels shall replace the prescribed wall assembly.
2. Interpolation shall not be permitted.
3. Cripple walls or wood-framed basement walls in a walk-out condition shall be designated as the first story, and the stories above shall be re-designated as the second and third stories, respectively, and shall be prohibited in a three-story structure.
4. Actual lengths of the sides of the circumscribed rectangle shall be rounded to the next highest unit of ten (10) when using this table.
5. For Exposure Category C, multiply bracing units by a factor of 1.20 for a one-story building, 1.30 for a two-story building, and 1.40 for a three-story building.
6. This table is valid for wall heights up to 10' in accordance with IRC Section R602.12.
7. A bracing unit is one nominal 24" wide panel.

6.4 *Minimum Total Length (ft) of Braced Wall Panels Required Along Each Braced Wall Line*

6.4.1 C-SIP may be used on braced wall lines as an equivalent alternative to the IRC Method WSP and Method CS-WSP, when installed in accordance with IRC Section R602.10 and this report.

6.4.2 For wind design, required braced wall panel lengths for C-SIP shall be as shown in **Table 2**, and shall be used in conjunction with IRC Table R602.10.3(2), which provides the required adjustments.

Information contained in this report was developed using report holder's confidential intellectual property (IP) and trade secrets (TS), which is protected by Defend Trade Secrets Act 2016, © DrJ Engineering, LLC

Table 2. Minimum Total Length (ft) of Bracing Required Along Each Braced Wall Line - Wind Design[1,2,3,4,5,6]

Minimum Total Length (ft) of Braced Wall Panels Required Along Each Braced Wall Line Condition	Braced Wall Line Spacing (ft)	Minimum Total Length (ft) of Braced Wall Panels Required Along Each Braced Wall Line											
		Intermittent Sheathing						Continuous Sheathing					
		Ultimate Design Wind Speed											
		< 95 mph	≤ 110 mph	≤ 115 mph	≤ 120 mph	≤ 130 mph	< 140 mph	< 95 mph	≤ 110 mph	≤ 115 mph	≤ 120 mph	≤ 130 mph	< 140 mph
One Story or the Top of Two or Three Stories	10	1.4	1.9	1.9	2.4	2.4	2.8	1.4	1.4	1.9	1.9	2.4	2.4
	20	2.4	3.3	3.3	3.8	4.7	5.2	2.4	2.8	3.3	3.3	3.8	4.7
	30	3.8	4.7	5.2	5.6	6.6	7.5	3.3	4.2	4.2	4.7	5.6	6.6
	40	4.7	6.1	6.6	7.5	8.5	9.9	3.8	5.2	5.6	6.1	7.1	8.5
	50	5.6	7.5	8.5	8.9	10.3	12.2	4.7	6.6	7.1	7.5	8.9	10.3
	60	6.6	8.9	9.9	10.8	12.2	14.1	5.6	7.5	8.5	8.9	10.3	12.2
First Story of Two Stories or Second Story of Three Stories	10	2.8	3.3	3.8	4.2	4.7	5.6	2.4	2.8	3.3	3.3	4.2	4.7
	20	4.7	6.1	7.1	7.5	8.9	10.3	4.2	5.2	6.1	6.6	7.5	8.5
	30	6.6	8.9	9.9	10.8	12.7	14.6	5.6	7.5	8.5	8.9	10.8	12.2
	40	8.9	11.8	12.7	14.1	16.5	18.8	7.5	9.9	10.8	11.8	14.6	16.0
	50	10.8	14.6	15.5	16.9	20.2	23.0	9.4	12.2	13.2	14.6	16.9	19.7
	60	12.7	16.9	18.8	20.2	23.5	27.3	10.8	14.6	16.0	17.4	20.2	23.5
First Story of Three Stories	10	3.8	5.2	5.6	6.1	7.1	8.0	3.3	4.2	4.7	5.2	6.1	7.1
	20	7.1	9.4	10.3	10.8	12.7	15.0	6.1	8.0	8.5	9.4	10.8	12.7
	30	9.9	13.2	14.6	16.0	18.3	21.6	8.5	11.3	12.2	13.6	16.0	18.3
	40	12.7	17.4	18.8	20.7	24.0	27.7	10.8	14.6	16.0	17.4	20.7	23.5
	50	16.0	21.2	23.0	25.4	29.6	34.3	13.6	17.9	19.7	21.6	24.9	29.1
	60	18.8	24.9	27.3	30.1	35.3	40.4	16.0	21.6	23.5	25.4	29.6	34.3

SI: 1 in. = 25.4 mm, 1 mph = 1.61 km/h

1. Linear interpolation is permitted.
2. C-SIP walls assemblies shall be constructed as described in **Section 2** and the manufacturer installation instructions.
3. Demonstrates equivalency to IRC Table R602.10.3(1). All adjustment factors from IRC Table R602.10.3(2) shall be applied.
4. Wind speeds are V_{ult} in accordance with ASCE 7-22. Convert to equivalent V_{asd} wind speed per IBC Section 1609.3.1.
5. Bracing lengths based on assemblies fastened at the top and bottom with fasteners 6" o.c.
6. This table is valid for wall heights up to 10'. For walls up to 12' in height, multiply the listed bracing lengths by the ratio of the actual wall height divided by 10'.

Information contained in this report was developed using report holder's confidential intellectual property (IP) and trade secrets (TS), which is protected by Defend Trade Secrets Act 2016, © DrJ Engineering, LLC

6.5 *Required Bracing Lengths for C-SIP (Method WSP and CS-WSP) – Seismic*

6.5.1 For seismic design, required braced wall panel lengths for C-SIP shall be as shown in **Table 3**, and shall be used in conjunction with IRC Table R602.10.3(4), which provides the required adjustments.

Table 3. Required Bracing Lengths for C-SIP (Method WSP and CS-WSP) – Seismic[1,2,3,4,5]

Condition	Braced Wall Line Spacing (ft)	Minimum Total Length (ft) of Braced Wall Panels Required Along Each Braced Wall Line							
		Intermittent Sheathing				Continuous Sheathing			
		Seismic Design Category (SDC)							
		C	D_0	D_1	D_2	C	D_0	D_1	D_2
One Story or the Top of Two or Three Stories	10	1.6	1.7	1.9	2.3	1.3	1.6	1.6	2.0
	20	3.0	3.4	3.8	4.7	2.5	2.9	3.2	4.0
	30	4.5	5.1	5.6	7.1	3.9	4.3	4.8	6.0
	40	6.0	6.8	7.5	9.4	5.1	5.8	6.4	8.0
	50	7.5	8.4	9.4	11.7	6.4	7.2	8.0	10.0
First Story of Two Stories or Second Story of Three Stories	10	2.8	3.5	4.2	5.2	2.4	3.0	3.5	4.4
	20	5.6	7.1	8.4	10.3	4.8	6.0	7.2	8.9
	30	8.4	10.6	12.7	15.5	7.2	9.0	10.8	13.2
	40	11.3	14.1	16.9	20.7	9.6	12.0	14.4	17.6
	50	14.1	17.7	21.1	25.9	12.0	15.1	17.9	22.0
First Story of Three Stories	10	4.2	5.0	5.6	NP	3.5	4.2	4.8	NP
	20	8.4	9.9	11.3	NP	7.2	8.4	9.6	NP
	30	12.7	14.8	16.9	NP	10.8	12.6	14.4	NP
	40	16.9	19.7	22.6	NP	14.4	16.8	19.2	NP
	50	21.1	24.7	28.2	NP	17.9	20.9	24.0	NP

SI: 1 in. = 25.4 mm, 1 mph = 1.61 km/h

1. C-SIP walls assemblies shall be constructed as described in **Section 2** and the manufacturer installation instructions.
2. Demonstrates equivalency to IRC Table R602.10.3(3). All applicable adjustment factors from IRC Table R602.10.3(4) shall be applied.
3. Tabulated bracing lengths are based on the following:
   a. Soil Class D
   b. Wall height = 10'
   c. 10 psf floor dead load
   d. 15 psf roof/ceiling dead load
   e. Braced wall line spacing ≤ 25'
4. Linear interpolation is permitted.
5. Bracing lengths are the results of comparative equivalency testing and analysis using both tested and published design values as points of comparison. DrJ relies upon the design values published in the codes and standards listed in **Section 4** that are adopted into law and that the manufacturer of those products stand behind. DrJ performs all equivalency analysis based on legally defined design values, the responsibility for which is the manufacturer of those products or the members of the associations that publish those design values.

EGAT

Information contained in this report was developed using report holder's confidential intellectual property (IP) and trade secrets (TS), which is protected by Defend Trade Secrets Act 2016, © DrJ Engineering, LLC

6.6 *C-SIP Equivalency Factor to IRC Wall Bracing Provisions*

6.6.1 **Table 4** provides an equivalency factor that can be used to adjust the IRC bracing tables for use with C-SIP.

6.6.2 Multiply the bracing lengths derived from IRC Table R602.10.3(1) and IRC Table R602.10.3(3), including all applicable adjustments found in IRC Table R602.10.3(2) and IRC Table R602.10.3(4), respectively.

6.6.3 All other IRC prescriptive bracing minimums, spacing requirements, and rules must still be met.

Table 4. C-SIP Equivalency Factor to IRC Wall Bracing Provisions[1,2]

Bearing Wall System	Maximum Aspect Ratio	Fastener Spacing		Wind Minimum SPF Structural Member Equivalency Factors to IRC WSP or CS-WSP
		Panel to Steel Slot Track	Steel Slot Track to Foundation	
5 3/4" (146 mm) C-SIP Wall Assembly	1.8:1	6" o.c.	20" o.c.	0.96

SI: 1 in = 25.4 mm

1. Based on equivalency testing for use with the IRC.
2. C-SIP tested equivalency factors allow the user to determine the length of bracing required, by multiplying the factor by the length of bracing shown in the WSP or CS WSP columns in IRC Table R602.10.3(1) and IRC Table R602.10.3(3), as modified by all applicable factors in IRC Table R602.10.3(2) and IRC Table R602.10.3(4), respectively.

6.7 *Transverse Load Resistance*

6.7.1 The maximum allowable transverse load resistance capacities for various deflection limits and product thicknesses are shown in **Table 5**.

Table 5. Allowable Transverse Load (psf) at Various Deflection Limits for C-SIP Structural Members[1]

Bearing Wall System	Maximum Allowable Wind Pressure (psf)	Maximum Wind Pressure at Various Deflection Limits (psf)			
		L/180	L/240	L/360	L/480
3 3/4" (96 mm) C-SIP	40	40	40	25	20
5 3/4" (146 mm) C-SIP	85	85	85	70	55

SI: 1 in = 25.4 mm, 1 psf = 0.048 kPa

1. Limited to wall height of 10'. For walls taller than 10', an engineered design per **Table 10** is required.

LEGACY

Information contained in this report was developed using report holder's confidential intellectual property (IP) and trade secrets (TS), which is protected by Defend Trade Secrets Act 2016, © DrJ Engineering, LLC

6.8 *Basic Wind Speed (mph) for C-SIP Used in Exterior Sheathed Assemblies*

6.8.1 The maximum basic wind speed for C-SIP for various deflection limits used in wall applications are shown in **Table 6**.

Table 6. Maximum Transverse Basic Wind Speed (V_{ult}) for C-SIP for Various Deflection Limits Used in Wall Applications[1,2,3]

Bearing Wall System	Maximum Wind Speed (mph)	Maximum Wind Speed at Various Deflection Limits (mph)			
		L/180	L/240	L/360	L/480
96 mm C-SIP	165	165	160	135	120
146 mm C-SIP	200	200	200	200	200

SI: 1 in = 25.4 mm, 1 mph = 1.61 km/h

1. Design wind load capacity shall be in accordance with ASCE 7-22 as specified in IBC Section 1609.1.1.
2. Allowable wind speeds are based on the following:
   a. A building height of 30-feet, GC_p= -1.4 for Zone 5 and an Effective Wind Area of 10 ft², Topographic Factor: K_{zt}=1.0, Ground Elevation Factor: K_e=1.0, Internal Pressure Coefficient, GC_{pi}=+/-0.18 for an enclosed building, K_d = 0.85 for *"Component and Cladding"*, Exposure B.
3. IBC Section 1609.3.1: $V_{asd} = V_{ult}\sqrt{0.6}$.
4. Limited to wall height of 10'. For wall taller than 10', an engineered design per **Table 10** is required.

6.9 *Seismic Resistance*

6.9.1 C-SIP shear walls that require seismic design in accordance with IBC Section 1613 shall use the seismic allowable unit shear capacities set forth in **Table 7**.

6.9.1.1 The response modification coefficient, R, system overstrength factor, Ω_0, and deflection amplification factor, C_d, indicated in **Table 7**, shall be used to determine the base shear, element design forces, and design story drift in accordance with ASCE 7 Chapter 12 and Section 14.5.

Table 7. Allowable Seismic Unit Shear Capacity and Seismic Design Coefficients for 146 mm C-SIP Panels[1]

Seismic Force-Resisting System[6,7]	Seismic Allowable Unit Shear Capacity (plf)	Apparent Shear Stiffness, G_a (kips/in)	Response Modification Factor, R[2]	System Overstrength Factor, Ω_0[3]	Deflection Amplification Coefficient, C_d[4]	Structural System Limitations and Building Height Limit[5] (ft)				
						SDC[8]				
						B	C	D	E	F
146 mm C-SIP	245	5.5	6.5	3	4	NL	NL	65	65	65

SI: 1 in = 25.4 mm, 1 lb/ft = 0.0146 kN/m, 1 kips/in = 175 N/mm

1. All seismic design parameters follow the equivalency as defined in **Section 8** of this report.
2. Response modification coefficient, R, for use throughout ASCE 7. ***Note:*** R reduces forces to a strength level, not an allowable stress level.
3. The tabulated value of the overstrength factor, Ω_0, is permitted to be reduced by subtracting one-half (0.5) for structures with flexible diaphragms.
4. Deflection amplification factor, C_d, for use with ASCE 7 Sections 12.8.6, 12.8.7, and 12.9.1.2.
5. NL = Not Limited. Heights are measured from the base of the structure as defined in ASCE 7 Section 11.2.
6. C-SIP must be installed properly in accordance with the manufacturer installation instructions for seismic applications.
7. C-SIP may be installed on either the interior or exterior side of the wall.
8. SDC = Seismic Design Category

Information contained in this report was developed using report holder's confidential intellectual property (IP) and trade secrets (TS), which is protected by Defend Trade Secrets Act 2016, © DrJ Engineering, LLC

6.10 *Axial Capacity*

6.10.1 C-SIP walls were evaluated for axial performance (uplift and gravity load) in accordance with ASTM E72.

6.10.1.1 Maximum allowable uplift capacities are provided in **Table 8**.

Table 8. Allowable Axial Capacities for C-SIP Panels[1,2,3]

Bearing Wall System	Maximum Allowable Uplift Capacity (plf)	Maximum Allowable Compressive Load (plf)
90 mm C-SIP	-	4,850
96 mm C-SIP	420	5,000
146 mm C-SIP	420	8,000

SI: 1 in = 25.4 mm, 1 lb/ft = 0.0146 kN/m

1. C-SIP walls assemblies shall be constructed as described in **Section 2** and the manufacturer installation instructions.
2. Maximum fastener spacing along the steel slot tracks shall be 6" o.c.
3. Applicable up to wall height of $11^{3}/_{4}$'.

6.11 *C-SIP Hanging Force*

6.11.1 90 mm C-SIP were evaluated for resistance to a hanging force in accordance with GB/T 23451 to assess the strength and durability of C-SIP when product is subjected to gravity loads from a hanging object (e.g., cabinets, wall-mounted shelving, wall-mounted television, etc.) without cracking.

6.11.1.1 Maximum allowable hanging force is provided in **Table 9**.

Table 9. Allowable Hanging Force for C-SIP Panels

Bearing Wall System	Maximum Allowable Load (lb)	Maximum Allowable Moment[1] (lb-in)
90 mm C-SIP	75	285

SI: 1 in = 25.4 mm, 1 lb = 4.45 N, 1 lb-in = 113 N-mm

1. Hanging force test evaluated with a lever arm of $3^{15}/_{16}$".

6.12 *C-SIP Design Properties*

6.12.1 Whenever a building design involving C-SIP is outside of the prescriptive conditions, which are the tabulated resistance properties found in **Table 1** through **Table 8**, a professional engineer shall use **Table 10** for calculations where required by statute in the jurisdiction where the building is located.

Table 10. Allowable Design Properties[1]

Product	F_b (psi)	F_t (psi)	F_c (psi)	EI (lb-in^2)	MOE (psi)	Nominal I_{xx} (in^4)	Nominal S_x (in^3)
90 mm C-SIP	190	-	115	-	-	44.5	25.1
96 mm C-SIP	275	10	110	21,900,000	1,590,000	54.0	28.6
146 mm C-SIP	255	10	115	64,900,000	1,340,000	189.9	66.1

1. Allowable design properties based on a 12" wide section.

Information contained in this report was developed using report holder's confidential intellectual property (IP) and trade secrets (TS), which is protected by Defend Trade Secrets Act 2016, © DrJ Engineering, LLC

6.13 *Fire Performance*

6.13.1 *Fire-Resistance Rating:*

6.13.1.1 C-SIP was evaluated to determine its fire resistance rating in accordance with ASTM E119.

6.13.1.1.1 C-SIP achieved a 1-hour fire rating when used for non-loadbearing applications.

6.13.1.1.1.1 Product did not collapse at the 60-minute mark

6.13.1.1.1.2 No cracks, holes, or openings were developed through which flames or gases could pass.

6.13.1.1.1.3 The temperature of the unexposed side did not exceed 220° C and/or 140° C above the initial temperature.

6.13.2 *Reaction to Fire:*

6.13.2.1 C-SIP was evaluated for fire performance in accordance with ASTM E136.

6.13.2.1.1 C-SIP is considered non-combustible when evaluated in accordance with ASTM E136.

6.13.2.1.2 When tested in accordance with ASTM E84, C-SIP will obtain a Class A rating.

6.13.2.2 C-SIP was evaluated for fire performance in accordance with EN 13501-1 and received a fire classification of A1.

6.13.2.2.1 C-SIP is considered non-combustible when evaluated in accordance with EN ISO 1182.

6.13.2.2.2 C-SIP has been evaluated in accordance with EN ISO 1716 and has a gross heat of combustion (PCS) ≤ 2.0 MJ/kg

6.13.3 *Exterior Wildfire Exposure:*

6.13.3.1 Use of C-SIP within a Wildland-Urban Interface (WUI) Fire Area shall comply with the following provisions:

6.13.3.1.1 CBC Chapter 7A (specifically, CBC Section 707A for exterior wall applications)

6.13.3.1.2 CRC Section R337 (specifically, CRC Section R337.7 for exterior wall applications)

6.13.3.1.3 2016 California Referenced Standards Code, Chapter 12-7A

6.13.3.2 C-SIP, being non-combustible and achieving a 1-hour fire-resistance rating, may be used in the following applications:

6.13.3.2.1 Ignition-resistant materials as specified in CBC Section 704A.2 and CRC Section R337.4.2.

6.13.3.2.2 Exterior wall coverings as specified in CBC Section 707A.3 and CRC Section R337.7.3.

6.13.3.2.3 Exterior wall assemblies as specified CBC Section 707A.4 and CRC Section R337.7.4, item 5.

6.14 *Thermal Resistance*

6.14.1 C-SIP has been evaluated to determine its thermal resistance in accordance with EN 12667.

Table 11. Thermal Resistance Properties

Product	R-Value(h·ft²·°F/Btu)	RSI (m²·K/W)
90 mm C-SIP	3.58	0.63
96 mm C-SIP	5.26	0.93
146 mm C-SIP	8.00	1.41
SI: 1 in = 25.4 mm, 1 (h·ft²·°F)/Btu = 0.1761 (m²·K)/W		

LEGACY

Information contained in this report was developed using report holder's confidential intellectual property (IP) and trade secrets (TS), which is protected by Defend Trade Secrets Act 2016, © DrJ Engineering, LLC

6.15 *Durability*

6.15.1 *Freeze-Thaw Resistance:*

6.15.1.1 C-SIP has been evaluated to determine its resistance to freeze-thaw cycles in accordance with GB/T 23451.

6.15.1.1.1 90 mm C-SIP met the requirements specified in GB/T 23451 where no visible cracks appeared on the surface of the specimens.

6.15.2 *Impact Resistance:*

6.15.2.1 C-SIP has been evaluated to determine its impact resistance in accordance with GB/T 23451.

6.15.2.1.1 90 mm C-SIP met the requirements specified in GB/T 23451 where no visible cracks appeared on the surface of the specimens.

6.16 *Sound Insulation Properties*

6.16.1 C-SIP has been evaluated to determine its sound insulation properties in accordance with ISO 140 3:1995+A1:2004 and the weighted Sound Reduction Index was determined in accordance with ISO 717-1:1996+A1:2006.

6.16.1.1 90 mm C-SIP achieved a weighted Sound Reduction Index, R_w (C; C_{tr}) of 37 (0;-2) dB.

6.16.1.1.1 C: calculated with weighted pink noise

6.16.1.1.2 C_{tr}: calculated with weighted urban traffic noise

6.17 Where the application falls outside of the performance evaluation, conditions of use, and/or installation requirements set forth herein, alternative techniques shall be permitted in accordance with accepted engineering practice and experience. This includes but is not limited to the following areas of engineering: mechanics or materials, structural, building science, and fire science.

7 Certified Performance[27]

7.1 All construction methods shall conform to accepted engineering practices to ensure durable, livable, and safe construction and shall demonstrate acceptable workmanship reflecting journeyman quality of work of the various trades.[28]

7.2 The strength and rigidity of the component parts and/or the integrated structure shall be determined by engineering analysis or by suitable load tests to simulate the actual loads and conditions of application that occur.[29]

LEGACY

Information contained in this report was developed using report holder's confidential intellectual property (IP) and trade secrets (TS), which is protected by Defend Trade Secrets Act 2016, © DrJ Engineering, LLC

8 Regulatory Evaluation and Accepted Engineering Practice

8.1 C-SIP comply with the following legislatively adopted regulations and/or accepted engineering practice for the following reasons:

8.1.1 Structural performance under lateral load conditions for wind and seismic loading for use with the IBC performance-based provisions of IBC Section 2206.1.1 for light-frame steel wall assemblies.

8.1.1.1 **Table 7** provides SDC that conform to the requirements in ASCE 7 Section 12.2.1 and Table 12.2-1 for design of wall assemblies in buildings that require seismic design in accordance with ASCE 7 (i.e., all seismic design categories).

8.1.1.2 The basis for equivalency testing is outlined in Section 12.2.1 of ASCE 7:

> **12.2.1.1 Alternative Structural Systems.** Use of seismic force-resisting systems not contained in Table 12.2-1 shall be permitted contingent on submittal to and approval by the Authority Having Jurisdiction and independent structural design review of an accompanying set of design criteria and substantiating analytical and test data. The design criteria shall specify any limitations on system use, including Seismic Design Category and height; required procedures for designing the system's components and connections; required detailing; and the values of the response modification coefficient, R; overstrength factor, Ω_0, and deflection amplification factor, C_d.

8.1.1.3 The basis of the seismic evaluation performed as part of this report is based on ASTM D7989 and testing per ASTM E2126 to establish SDC that conform to the requirements of ASCE 7 Section 12.2.1.1.

8.1.2 Resistance to transverse loads for wall assemblies used in light-frame wood and steel construction in accordance with IBC Section 1609.1.1 and IRC Section R301.2.1.

8.1.3 Resistance to gravity loads for wall assemblies used in light-frame steel construction in accordance with IBC Section 1604 and IRC Section R301.1.

8.2 Any building code, regulation and/or accepted engineering evaluations (i.e., research reports, duly authenticated reports, etc.) that are conducted for this Listing were performed by DrJ, which is an ISO/IEC 17065 accredited certification body and a professional engineering company operated by RDP or approved sources. DrJ is qualified[30] to practice product and regulatory compliance services within its scope of accreditation and engineering expertise,[31] respectively.

8.3 Engineering evaluations are conducted with DrJ's ANAB accredited ICS code scope of expertise, which is also its areas of professional engineering competence.

8.4 Any regulation specific issues not addressed in this section are outside the scope of this report.

9 Installation

9.1 Installation shall comply with the approved construction documents, the manufacturer installation instructions, this report, and the applicable building code.

9.2 In the event of a conflict between the manufacturer installation instructions and this report, contact the manufacturer for counsel on the proper installation method.

9.3 *Installation Procedure*

9.3.1 Wall sections shall be connected in accordance with **Section 2** of this report and the manufacturer installation instructions.

9.3.2 Wall sections arrive pre-assembled. Panel-to-panel connections and panel-to-top and bottom rail members are completed onsite.

LEGACY

Information contained in this report was developed using report holder's confidential intellectual property (IP) and trade secrets (TS), which is protected by Defend Trade Secrets Act 2016, © DrJ Engineering, LLC

10 Substantiating Data

10.1 Testing has been performed under the supervision of a professional engineer and/or under the requirements of ISO/IEC 17025 as follows:

10.1.1 Transverse wind load resistance in accordance with ASTM E330

10.1.2 Lateral load resistance in accordance with ASTM E2126

10.1.3 Compression and tension load resistance in accordance with ASTM E72

10.1.4 Bending strength in accordance with EN 12089

10.1.5 Hanging force, impact, and freeze-thaw resistance in accordance with GBT 23451

10.1.6 Thermal resistance in accordance with EN 12667

10.1.7 Sound insulation in accordance with ISO 140-3 and ISO 717-1

10.1.8 Non-combustibility test in accordance with EN ISO 1182

10.1.9 Determination of gross heat of combustion in accordance with EN ISO 1716

10.1.10 Fire-resistance testing in accordance with SANS 10177-2

10.2 Information contained herein may include the result of testing and/or data analysis by sources that are approved agencies, approved sources, and/or an RDP. Accuracy of external test data and resulting analysis is relied upon.

10.3 Where applicable, testing and/or engineering analysis are based upon provisions that have been codified into law through state or local adoption of regulations and standards. The developers of these regulations and standards are responsible for the reliability of published content. DrJ's engineering practice may use a regulation-adopted provision as the control. A regulation-endorsed control versus a simulation of the conditions of application to occur establishes a new material as being equivalent to the regulatory provision in terms of quality, strength, effectiveness, fire resistance, durability, and safety.

10.4 The accuracy of the provisions provided herein may be reliant upon the published properties of raw materials, which are defined by the grade mark, grade stamp, mill certificate, or duly authenticated reports from approved agencies and/or approved sources provided by the supplier. These are presumed to be minimum properties and relied upon to be accurate. The reliability of DrJ's engineering practice, as contained in this duly authenticated report, may be dependent upon published design properties by others.

10.5 *Testing and Engineering Analysis*

10.5.1 The strength, rigidity, and/or general performance of component parts and/or the integrated structure are determined by suitable tests that simulate the actual conditions of application that occur and/or by accepted engineering practice and experience.[32]

10.6 Where additional condition of use and/or regulatory compliance information is required, please search for C-SIP on the DrJ Certification website.

11 Findings

11.1 As outlined in **Section 6**, C-SIP have performance characteristics that were tested and/or meet applicable regulations. In addition, they are suitable for use pursuant to its specified purpose.

11.2 When used and installed in accordance with this duly authenticated report and the manufacturer installation instructions, C-SIP shall be approved for the following applications:

11.2.1 Use in wall construction in accordance with code requirements and this report.

11.3 Unless exempt by state statute, when C-SIP are to be used as a structural and/or building envelope component in the design of a specific building, the design shall be performed by an RDP.

LEGACY

Information contained in this report was developed using report holder's confidential intellectual property (IP) and trade secrets (TS), which is protected by Defend Trade Secrets Act 2016, © DrJ Engineering, LLC

11.4 Any application specific issues not addressed herein can be engineered by an RDP. Assistance with engineering is available from CSP Homes, Inc.

11.5 IBC Section 104.2.3[33] (IRC Section R104.2.2[34] and IFC Section 104.2.3[35] are similar) in pertinent part state:

> **104.2.3 Alternative Materials, Design and Methods of Construction and Equipment.** The provisions of this code are not intended to prevent the installation of any material or to prohibit any design or method of construction not specifically prescribed by this code, provided that any such alternative is not specifically prohibited by this code and has been approved.

11.6 **Approved:**[36] Building regulations require that the building official shall accept duly authenticated reports.[37]

11.6.1 An approved agency is *"approved"* when it is ANAB ISO/IEC 17065 accredited.

11.6.2 An approved source is *"approved"* when an RDP is properly licensed to transact engineering commerce.

11.6.3 Federal law, Title 18 US Code Section 242, requires that, where the alternative product, material, service, design, assembly, and/or method of construction is not approved, the building official shall respond in writing, stating the reasons why the alternative was not approved. Denial without written reason deprives a protected right to free and fair competition in the marketplace.

11.7 DrJ is a licensed engineering company, employs licensed RDPs and is an ANAB Accredited Product Certification Body – Accreditation #1131.

11.8 Through the IAF Multilateral Arrangement (MLA), this duly authenticated report can be used to obtain product approval in any jurisdiction or country because all ANAB ISO/IEC 17065 duly authenticated reports are equivalent.[38]

12 Conditions of Use

12.1 Material properties shall not fall outside the boundaries defined in **Section 6**.

12.2 As defined in **Section 6**, where material and/or engineering mechanics properties are created for load resisting design purposes, the resistance to the applied load shall not exceed the ability of the defined properties to resist those loads using the principles of accepted engineering practice.

12.3 When used in WUI zones, exterior wall assemblies shall extend from the top of the foundation to the roof and terminate at 2" nominal solid wood blocking between rafters at all roof overhangs as specified in CBC Section 707A.3.1 and CRC Section R337.7.3.1.

12.3.1 Where there are enclosed eaves, exterior wall assemblies shall terminate at the enclosure.

12.4 When required by adopted legislation and enforced by the building official, also known as the Authority Having Jurisdiction (AHJ) in which the project is to be constructed:

12.4.1 Any calculations incorporated into the construction documents shall conform to accepted engineering practice and, when prepared by an approved source, shall be approved when signed and sealed.

12.4.2 This report and the installation instructions shall be submitted at the time of permit application.

12.4.3 This innovative product has an internal quality control program and a third-party quality assurance program.

12.4.4 At a minimum, this innovative product shall be installed per **Section 9**.

12.4.5 The review of this report by the AHJ shall comply with IBC Section 104.2.3.2 and IBC Section 105.3.1.

LEGACY

Information contained in this report was developed using report holder's confidential intellectual property (IP) and trade secrets (TS), which is protected by Defend Trade Secrets Act 2016, © DrJ Engineering, LLC

12.4.6 This innovative product has an internal quality control program and a third party quality assurance program in accordance with IBC Section 104.7.2, IBC Section 110.4, IBC Section 1703, IRC Section R104.7.2, and IRC Section R109.2.

12.4.7 The application of this innovative product in the context of this report is dependent upon the accuracy of the construction documents, implementation of installation instructions, inspection as required by IBC Section 110.3, IRC Section R109.2, and any other regulatory requirements that may apply.

12.5 The approval of this report by the AHJ shall comply with IBC Section 1707.1, where legislation states in part, *"the building official shall make, or cause to be made, the necessary tests and investigations; or the building official shall accept duly authenticated reports from approved agencies in respect to the quality and manner of use of new materials or assemblies as provided for in Section 104.2.3"*, all of IBC Section 104, and IBC Section 105.3.

12.6 Design loads shall be determined in accordance with the regulations adopted by the jurisdiction in which the project is to be constructed and/or by the building designer (i.e., owner or RDP).

12.7 The actual design, suitability, and use of this report for any particular building, is the responsibility of the owner or the authorized agent of the owner.

13 Identification

13.1 Concrete Structural Steel Insulated Interlocking Plug-N-Play Panels (C-SIP), as listed in **Section 1.1**, are identified by a label on the board or packaging material bearing the manufacturer name, product name, this report number, and other information to confirm code compliance.

13.2 Additional technical information can be found at csp.homes.

14 Review Schedule

14.1 This report is subject to periodic review and revision. For the latest version, visit www.drjcertification.org.

14.2 For information on the status of this report, please contact DrJ Certification.

LEGACY

Information contained in this report was developed using report holder's confidential intellectual property (IP) and trade secrets (TS), which is protected by Defend Trade Secrets Act 2016, © DrJ Engineering, LLC

Issue Date: November 20, 2023
Subject to Renewal: October 1, 2026

FBC Supplement to Report Number 2302-01

REPORT HOLDER: CSP Homes, Inc.

1 Evaluation Subject

1.1 Concrete Structural Steel Insulated Interlocking Plug-N-Play Panels (C-SIP)

2 Purpose and Scope

2.1 Purpose

2.1.1 The purpose of this Report Supplement is to show C-SIP, recognized in Report Number 2302-01, have also been evaluated for compliance with the codes listed below as adopted by the Florida Building Commission.

2.2 *Applicable Code Editions*

2.2.1 *FBC-B – 20, 23: Florida Building Code - Building (FL 44554)*

2.2.2 *FBC-R – 20, 23: Florida Building Code – Residential (FL 44554)*

3 Conclusions

3.1 C-SIP, described in Report Number 2302-01, comply with the FBC-B and FBC-R and are subject to the conditions of use described in this supplement.

3.2 Where there are variations between the IBC and IRC and the FBC-B and FBC-R applicable to this report, they are listed here:

3.2.1 FBC-B Section 104 is reserved.

3.2.2 FBC-B Section 110.4 is reserved and replaces IBC Section 110.4.

3.2.3 FBC-B Section 104.6 is reserved and replaces IBC Section 104.4.

3.2.4 FBC-B Section 104.11 replaces IBC Section 104.2.3 and Section 104.2.3.2.

3.2.5 FBC-B Section 105.3 replaces IBC Section 105.3.

3.2.6 FBC-B Section 105.3.1 replaces IBC Section 105.3.1.

3.2.7 FBC-B Section 110.3 replaces IBC Section 110.3.

3.2.8 FBC-B Section 1609.1.1 replaces IBC Section 1609.1.1.

3.2.9 FBC-B Section 1609.3.1 replaces IBC Section 1609.3.1.

3.2.10 FBC-B Section 1707.1 replaces IBC Section 1707.1.

3.2.11 FBC-B Section 2306.1 replaces IBC Section 2306.1.

3.2.12 FBC-B Section 2306.3 replaces IBC Section 2306.3.

3.2.13 FBC-R Section R104 and Section R109 are reserved.

3.2.14 FBC-R Section R301.1 replaces IRC Section R301.1.

3.2.15 FBC-R Section R301.2.1 replaces IRC Section R301.2.1.

3.2.16 FBC-R Section R602.10 and Section R602.12.4 are reserved.

LEGACY

Information contained in this report was developed using report holder's confidential intellectual property (IP) and trade secrets (TS), which is protected by Defend Trade Secrets Act 2016, © DrJ Engineering, LLC

4 Conditions of Use

4.1 C-SIP, described in Report Number 2302-01, must comply with all of the following conditions:

4.1.1 All applicable sections in Report Number 2302-01.

4.1.2 The design, installation, and inspections are in accordance with additional requirements of FBC-B Chapter 16 and Chapter 17, as applicable.

LEGACY

Information contained in this report was developed using report holder's confidential intellectual property (IP) and trade secrets (TS), which is protected by Defend Trade Secrets Act 2016, © DrJ Engineering, LLC

Notes

1 For more information, visit drjcertification.org or call us at 608-310-6748.

2 Capitalized terms and responsibilities are defined pursuant to the applicable building code, applicable reference standards, the latest edition of TPI 1, the NDS, AISI S202, US professional engineering law, Canadian building code, Canada professional engineering law, Qualtim External Appendix A: Definitions/Commentary, Qualtim External Appendix B: Project/Deliverables, Qualtim External Appendix C: Intellectual Property and Trade Secrets, definitions created within Design Drawings and/or definitions within Reference Sheets. Beyond this, terms not defined shall have ordinarily accepted meanings as the context implies. Words used in the present tense include the future; words stated in the masculine gender include the feminine and neuter; the singular number includes the plural and the plural, the singular.

3 https://up.codes/viewer/mississippi/ibc-2024/chapter/17/special-inspections-and-tests#1702

4 Alternative Materials, Design and Methods of Construction and Equipment: The provisions of any regulation code are not intended to prevent the installation of any material or to prohibit any design or method of construction not specifically prescribed by a regulation. Please review https://www.justice.gov/atr/mission and https://up.codes/viewer/mississippi/ibc-2024/chapter/1/scope-and-administration#104.2.3

5 https://up.codes/viewer/mississippi/ibc-2024/chapter/17/special-inspections-and-tests#1706.2:~:text=the%20design%20strengths%20and%20permissible%20stresses%20shall%20be%20established%20by%20tests

6 The design strengths and permissible stresses of any structural material shall conform to the specifications and methods of design of accepted engineering practice. https://up.codes/viewer/mississippi/ibc-2024/chapter/17/special-inspections-and-tests#1706.1:~:text=Conformance%20to%20Standards-,The%20design%20strengths%20and%20permissible%20stresses,-of%20any%20structural

7 https://up.codes/viewer/mississippi/ibc-2024/chapter/17/special-inspections-and-tests#1707.1:~:text=the%20building%20official%20shall%20make%2C%20or%20cause%20to%20be%20made%2C%20the%20necessary%20tests%20and%20investigations%3B%20or%20the%20building%20official%20shall%20accept%20duly%20authenticated%20reports%20from%20approved%20agencies%20in%20respect%20to%20the%20quality%20and%20manner%20of%20use%20of%20new%20materials%20or%20assemblies%20as%20provided%20for%20in%20Section%20104.2.3.

8 https://up.codes/viewer/mississippi/ibc-2024/chapter/17/special-inspections-and-tests#1703.4.2

9 https://up.codes/viewer/mississippi/ibc-2024/chapter/2/definitions#approved_agency

10 https://up.codes/viewer/mississippi/ibc-2024/chapter/2/definitions#approved_source

11 https://www.law.cornell.edu/uscode/text/18/1832 (b) Any organization that commits any offense described in subsection (a) shall be fined not more than the greater of $5,000,000 or 3 times the value of the stolen trade secret to the organization, including expenses for research and design and other costs of reproducing the trade secret that the organization has thereby avoided. The federal government and each state have a public records act. To follow DTSA and comply state public records and trade secret legislation requires approval through ANAB ISO/IEC 17065 accredited certification bodies or approved sources. For more information, please review this website: Intellectual Property and Trade Secrets.

12 https://www.nspe.org/resources/issues-and-advocacy/professional-policies-and-position-statements/regulation-professional AND https://apassociation.org/list-of-engineering-boards-in-each-state-archive/

13 https://www.cbitest.com/accreditation/

14 https://up.codes/viewer/mississippi/ibc-2024/chapter/1/scope-and-administration#104.1:~:text=directed%20to%20enforce%20the%20provisions%20of%20this%20code

15 https://up.codes/viewer/mississippi/ibc-2024/chapter/1/scope-and-administration#104.2.3 AND https://up.codes/viewer/mississippi/ibc-2024/chapter/1/scope-and-administration#105.3.1

16 https://up.codes/viewer/mississippi/ibc-2024/chapter/17/special-inspections-and-tests#1707.1

17 https://iaf.nu/en/about-iaf-mla/#:~:text=Once%20an%20accreditation%20body%20is%20a%20signatory%20of%20the%20IAF%20MLA%2C%20it%20is%20required%20to%20recognise%20certificates%20and%20validation%20and%20verification%20statements%20issued%20by%20conformity%20assessment%20bodies%20accredited%20by%20all%20other%20signatories%20of%20the%20IAF%20MLA%2C%20with%20the%20appropriate%20scope

18 True for all ANAB accredited product evaluation agencies and all International Trade Agreements.

19 https://www.justice.gov/crt/deprivation-rights-under-color-law AND https://www.justice.gov/atr/mission

20 Unless otherwise noted, the links referenced herein use un-amended versions of the 2024 International Code Council (ICC) 2024 International Code Council (ICC) model codes as foundation references. Mississippi versions of the IBC 2024 and the IRC 2024 are un-amended. This material, product, design, service and/or method of construction also complies with the 2000-2012 versions of the referenced codes and the standards referenced therein. As pertinent to this technical and code compliance evaluation, CBI and/or DrJ staff have reviewed any state or local regulatory amendments to assure this report is in compliance.

21 See Adoptions by Publisher for the latest adoption of a non-amended or amended model code by the local jurisdiction. https://up.codes/codes/general

22 See Adoptions by Publisher for the latest adoption of a non-amended or amended model code by state. https://up.codes/codes/general

23 https://www.ecfr.gov/current/title-24/subtitle-B/chapter-XX/part-3282/subpart-A/section-3282.14

24 https://www.ecfr.gov/current/title-24/subtitle-B/chapter-XX/part-3280

25 All references to the FBC-B and FBC-R are the same as the 2024 IBC and 2024 IRC unless otherwise noted in the Florida Supplement at the end of this report.

26 https://www.ecfr.gov/current/title-24/subtitle-B/chapter-XX/part-3280#p-3280.2(Listed%20or%20certified); https://up.codes/viewer/mississippi/ibc-2024/chapter/2/definitions#listed AND https://up.codes/viewer/mississippi/ibc-2024/chapter/2/definitions#labeled

27 https://up.codes/viewer/mississippi/ibc-2024/chapter/17/special-inspections-and-tests#1703.4

28 https://www.ecfr.gov/current/title-24/subtitle-B/chapter-XX/part-3280#:~:text=All%20construction%20methods%20shall%20be%20in%20conformance%20with%20accepted%20engineering%20practices%20to%20insure%20durable%2C%20livable%2C%20and%20safe%20housing%20and%20shall%20demonstrate%20acceptable%20workmanship%20reflecting%20journeyman%20quality%20of%20work%20of%20the%20various%20trades

29 https://www.ecfr.gov/current/title-24/subtitle-B/chapter-XX/part-3280#:~:text=The%20strength%20and%20rigidity%20of%20the%20component%20parts%20and/or%20the%20integrated%20structure%20shall%20be%20determined%20by%20engineering%20analysis%20or%20by%20suitable%20load%20tests%20to%20simulate%20the%20actual%20loads%20and%20conditions%20of%20application%20that%20occur

LEGACY

Information contained in this report was developed using report holder's confidential intellectual property (IP) and trade secrets (TS), which is protected by Defend Trade Secrets Act 2016, © DrJ Engineering, LLC

[30] Qualification is performed by a legislatively defined Accreditation Body. ANSI National Accreditation Board (ANAB) is the largest independent accreditation body in North America and provides services in more than 75 countries. DrJ is an ANAB accredited product certification body.

[31] https://anabpd.ansi.org/Accreditation/product-certification/AllDirectoryDetails?prgID=1&orgID=2125&statusID=4#:~:text=Bill%20Payment%20Date-,Accredited%20Scopes,-13%20ENVIRONMENT.%20HEALTH

[32] See Code of Federal Regulations (CFR) Title 24 Subtitle B Chapter XX Part 3280 for definition: https://www.ecfr.gov/current/title-24/subtitle-B/chapter-XX/part-3280

[33] 2021 IBC Section 104.11

[34] 2021 IRC Section R104.11

[35] 2018: https://up.codes/viewer/wyoming/ifc-2018/chapter/1/scope-and-administration#104.9 AND 2021: https://up.codes/viewer/wyoming/ibc-2021/chapter/1/scope-and-administration#104.11

[36] Approved is an adjective that modifies the noun after it. For example, Approved Agency means that the Agency is accepted officially as being suitable in a particular situation. This example conforms to IBC/IRC/IFC Section 201.4 (https://up.codes/viewer/mississippi/ibc-2024/chapter/2/definitions#201.4) where the building code authorizes sentences to have an ordinarily accepted meaning such as the context implies.

[37] https://up.codes/viewer/mississippi/ibc-2024/chapter/17/special-inspections-and-tests#1707.1

[38] Multilateral approval is true for all ANAB accredited product evaluation agencies and all International Trade Agreements.

LEGACY

Information contained in this report was developed using report holder's confidential intellectual property (IP) and trade secrets (TS), which is protected by Defend Trade Secrets Act 2016, © DrJ Engineering, LLC