Listing and Technical Evaluation Report™

A Duly Authenticated Report from an Approved Agency

Report No: 2307-05

Issue Date: October 17, 2023

Revision Date: September 12, 2026

Subject to Renewal: October 1, 2027

Power Pro® Structural Wood Screws for Truss to Wall Connections

Trade Secret Report Holder:

The Hillman™ Group

Phone: 513-851-4900 Website: www.hillmangroup.com Email: info@hillmangroup.com

CSI Designations:

DIVISION: 06 00 00 - WOOD, PLASTICS AND COMPOSITES Section: 06 00 90 - Wood and Plastic Fastenings

1 Innovative Products Evaluated[1]

1.1 Power Pro Structural Wood Screws:

1.1.1 Power Pro® LumberTite® Structural Wood Screws

1.1.2 Power Pro® TimberTite® Structural Wood Screws

1.1.3 Power Pro® Structural Lag Screws

2 Product Description and Materials

2.1 The innovative products evaluated in this report are shown in **Figure 1**, **Figure 2**, and **Figure 3**.



Figure 1. LumberTite Fasteners

Information contained in this report was developed using report holder's confidential intellectual property (IP) and trade secrets (TS), which is protected by Defend Trade Secrets Act 2016, © DrJ Engineering, LLC

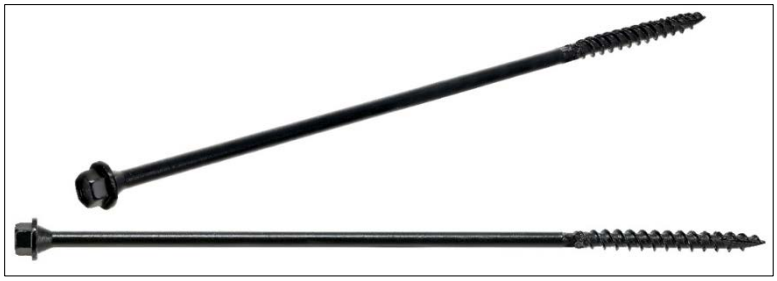

Figure 2. TimberTite Fasteners



Figure 3. Structural Lag Screws

2.2 *General*

2.2.1 Power Pro Structural Wood Screws are partially-threaded, self-drilling, dowel-type fasteners that are manufactured using standard cold-forming processes and are subsequently heat-treated and coated with a proprietary coating comprised of a zinc layer and an organic topcoat.

2.2.1.1 LumberTite fasteners are Torx-driven screws with an integrated washer.

2.2.1.2 TimberTite fasteners are $^{5}/_{16}$" hex-driven screws with an integrated washer.

2.2.1.3 Structural Lag Screws are Torx-driven screws with a flattened truss head.

2.3 *Fastener Material*

2.3.1 Power Pro Structural Wood Screws are made of hardened carbon steel.

2.4 *Corrosion Resistance*

2.4.1 Power Pro Structural Wood Screws may be used where screws are required to exhibit corrosion resistance when exposed to adverse environmental conditions, which are subject to the limitations of this report. Power Pro Structural Wood Screws have been evaluated for use in wood treated with ACQ-D preservatives with a retention of 0.40-pcf (6.4 kg/m^3) and may be used as an alternative to hot-dipped galvanized fasteners in wood treated with preservatives or less corrosive effects meeting ASTM A153, Class D (IBC Section 2304.10.6 and IRC Section R304.3[2]).

2.4.2 Power Pro Structural Wood Screws have a proprietary coating, which may be used as an alternative to the protection provided by code-approved hot-dipped galvanized coatings meeting ASTM A153, Class D (IBC Section 2304.10.6 and IRC Section R304.3[3]).

2.5 *Pressure-Preservative Treated (PPT) Wood Applications*

2.5.1 Power Pro Structural Wood Screws, with the proprietary coating, are recognized for use in PPT lumber provided the conditions set forth by the PPT lumber manufacturer be met, including appropriate strength reductions.

Information contained in this report was developed using report holder's confidential intellectual property (IP) and trade secrets (TS), which is protected by Defend Trade Secrets Act 2016, © DrJ Engineering, LLC

2.6 *Fire Retardant Treated (FRT) Wood Applications*

2.6.1 Power Pro Structural Wood Screws, with the proprietary coating, are recognized for use in FRT lumber provided the conditions set forth by the FRT lumber manufacturer be met, including appropriate strength reductions. The wood must also meet the NDS requirements for dry service conditions.

2.7 *Wood Members*

2.7.1 Solid sawn wood members connected using Power Pro Structural Wood Screws shall consist of lumber species or species combinations having a specific gravity of 0.42 to 0.55.

2.7.2 Structural composite lumber (e.g., LVL, LSL, PSL, etc.) connected with Power Pro Structural Wood Screws shall be recognized in evaluation reports having published equivalent specific gravities for lateral and withdrawal resistance.

2.8 *Fastener Specifications*

2.8.1 **Table 1** outlines the dimensions and mechanical properties of Power Pro Structural Wood Screws.

Table 1. Fastener Specifications for Power Pro Structural Wood Screws

Fastener Name	Nominal Diameter (in)	Length[1] (in)	Thread Length[2] (in)	Head Diameter[3] (in)	Unthreaded Shank Diameter (in)	Thread Diameter (in)		Nominal Bending Yield (psi)	Tensile Strength (lbf)	
						Minor	Major		ASD	LRFD
Power Pro LumberTite Screws	1/4	4 1/2	2.00	0.610	0.174	0.155	0.239	180,000	780	1,170
		6								
Power Pro TimberTite Screws	1/4	4	2.00	0.460	0.174	0.155	0.239	180,000	780	1,170
		6								
Power Pro Structural Lag Screws	1/4	4	2.38	0.540	0.174	0.155	0.239	180,000	780	1,170
		6								

SI: 1 in = 25.4 mm, 1-psi = 0.00689 MPa, 1-lbf = 4.448 N

1. Measured from the underside of the head to the tip.
2. Includes tip.
3. Nominal diameter of the washer head.

2.9 As needed, review material properties for design in **Section 6** and the regulatory evaluation in **Section 8**.

3 Definitions[4]

3.1 New Materials[5] are defined as building materials, equipment, appliances, systems, or methods of construction, not provided for by prescriptive and/or legislatively adopted regulations, known as alternative materials.[6] The design strength and permissible stresses shall be established by tests[7] and/or engineering analysis.[8]

3.2 Duly authenticated reports[9] and research reports[10] are test reports and related engineering evaluations that are written by an approved agency[11] and/or an approved source.[12]

3.2.1 This report utilizes intellectual property and/or trade secrets to create public domain material properties for commercial end-use.

3.2.1.1 This report protects confidential Intellectual Property and trade secrets under the regulation, 18.US.Code.90, also known as Defend Trade Secrets Act of 2016 (DTSA).[13]

Information contained in this report was developed using report holder's confidential intellectual property (IP) and trade secrets (TS), which is protected by Defend Trade Secrets Act 2016, © DrJ Engineering, LLC

3.3 An approved agency is *"approved"* when it is ANAB ISO/IEC 17065 accredited. DrJ Engineering, LLC (DrJ) is accredited and listed in the ANAB directory.

3.4 An approved source is *"approved"* when a professional engineer (i.e., Registered Design Professional, hereinafter RDP) is properly licensed to transact engineering commerce. The regulatory authority governing approved sources is the state legislature via its professional engineering regulations.[14]

3.5 Testing and/or inspections conducted for this duly authenticated report were performed by an ISO/IEC 17025 accredited testing laboratory, an ISO/IEC 17020 accredited inspection body, and/or a licensed RDP.

3.5.1 The Center for Building Innovation (CBI) is ANAB[15] ISO/IEC 17025 and ISO/IEC 17020 accredited.

3.6 The regulatory authority shall enforce[16] the specific provisions of each legislatively adopted regulation. If there is a non-conformance, the specific regulatory section and language of the non-conformance shall be provided in writing[17] stating the nonconformance and the path to its cure.

3.7 The regulatory authority shall accept duly authenticated reports from an approved agency and/or an approved source with respect to the quality and manner of use of new materials or assemblies as provided for in regulations regarding the use of alternative materials, designs, or methods of construction.[18]

3.8 ANAB is an International Accreditation Forum (IAF) Multilateral Recognition Arrangement (MLA) signatory. Therefore, recognition of certificates and validation statements issued by conformity assessment bodies accredited by all other signatories of the IAF MLA with the appropriate scope shall be approved.[19] Thus, all ANAB ISO/IEC 17065 duly authenticated reports are approval equivalent,[20] and can be used in any country that is an MLA signatory found at this link: https://iaf.nu/en/recognised-abs/

3.9 Approval equity is a fundamental commercial and legal principle.[21]

4 Applicable Local, State, and Federal Approvals; Standards; Regulations[22]

4.1 *Local, State, and Federal*

4.1.1 Approved in all local jurisdictions pursuant to ISO/IEC 17065 duly authenticated report use, which includes, but is not limited to, the following featured local jurisdictions: Austin, Baltimore, Broward County, Chicago, Clark County, Dade County, Dallas, Detroit, Denver, DuPage County, Fort Worth, Houston, Kansas City, King County, Knoxville, Las Vegas, Los Angeles City, Los Angeles County, Miami, Nashville, New York City, Omaha, Philadelphia, Phoenix, Portland, San Antonio, San Diego, San Jose, San Francisco, Seattle, Sioux Falls, South Holland, St. Louis County, Texas Department of Insurance, and Wichita.[23]

4.1.2 Approved in all state jurisdictions pursuant to ISO/IEC 17065 duly authenticated report use, which includes, but is not limited to, the following featured states: California, Florida, New Jersey, Oregon, New York, Texas, Washington, and Wisconsin.[24]

4.1.3 Approved by the Code of Federal Regulations Manufactured Home Construction: Pursuant to Title 24, Subtitle B, Chapter XX, Part 3282.14[25] and Part 3280[26] pursuant to the use of ISO/IEC 17065 duly authenticated reports.

4.1.4 Approved means complying with the requirements of local, state, or federal legislation.

4.2 *Regulations*

4.2.1 *IBC – 18, 21, 24: International Building Code®*

4.2.2 *IRC – 18, 21, 24: International Residential Code®*

4.2.3 *IECC – 18, 21, 24: International Energy Conservation Code®*

4.3 *Standards*

4.3.1 *AISI S904: Standard Test Method for Determining the Tensile and Shear Strength of Steel Screws*

4.3.2 *ANSI/AWC NDS: National Design Specification (NDS) for Wood Construction*

Information contained in this report was developed using report holder's confidential intellectual property (IP) and trade secrets (TS), which is protected by Defend Trade Secrets Act 2016, © DrJ Engineering, LLC

4.3.3 *ASTM A153: Standard Specification for Zinc Coating (Hot-Dip) on Iron and Steel Hardware*

4.3.4 *ASTM A510: Standard Specification for General Requirements for Wire Rods and Coarse Round Wire, Carbon Steel, and Alloy Steel*

4.3.5 *ASTM D1761: Standard Test Methods for Mechanical Fasteners in Wood and Wood-Based Materials*

4.3.6 *ASTM F1575-21: Standard Test Method for Determining Bending Yield Moment of Nails*

4.3.7 *AWC TR 12: General Dowel Equations for Calculating Lateral Connection Values*

5 Listed[27]

5.1 Equipment, materials, products, or services included in a List published by a nationally recognized testing laboratory (e.g., CBI), an approved agency (e.g., CBI and DrJ), and/or an approved source (e.g., DrJ), or other organization(s) concerned with product evaluation (e.g., DrJ), that maintains periodic inspection (e.g., CBI) of production of listed equipment or materials, and whose listing states either that the equipment or material meets nationally recognized standards or has been tested and found suitable for use in a specified manner.

6 Tabulated Properties Generated from Nationally Recognized Standards

6.1 *Structural Applications*

6.1.1 Power Pro Structural Wood Screws are used in construction of walls that meet the requirements of IBC Section 2308 or IRC Section R602 for the following applications:

6.1.1.1 To attach minimum $1^1/_2$" thick wood trusses or rafters to wood walls.

6.1.1.2 To attach bottom plates to rim boards in the construction of walls.

6.1.2 See **Section 6.2** and **Section 6.3** for allowable design loads.

6.1.3 Allowable design loads are applicable to fasteners installed in accordance with **Figure 5** through **Figure 9**, and **Section 9**.

6.1.4 Walls shall consist of a double top plate designed in accordance with IBC Section 2308.9.3.2[28] or IRC Section R602.3.2.

6.1.4.1 A single top plate is permitted to be used as an alternative to a double top plate, provided that provisions specified in IBC Section 2308.9.3.2[29] or IRC Section R602.3.2 be met.

6.1.5 Power Pro Structural Wood Screws are used in buildings requiring wind design in accordance with IBC Section 1609 or IRC Section R301.2.1.

6.1.6 Power Pro Structural Wood Screws are used in buildings requiring seismic design in accordance with IBC Section 1613 or IRC Section R301.2.2.

6.1.7 To maintain a continuous uplift load path, connections in the same area must be stacked on the same side of the wall (i.e., rafter to top plate connection and top plate to stud connection).

6.2 *Allowable Design Loads – Truss/Rafter/Joist to Top Plate Connection*

6.2.1 Allowable design loads for uplift and lateral resistance for truss, rafter, and joist to top plate connections are provided in **Table 2** and **Table 3**.

6.2.2 Loads parallel to the wall are labeled F1 and loads perpendicular to the wall are labeled F2. See **Figure 4** for load directions.

6.2.3 Allowable design loads are applicable to fasteners installed in accordance with **Figure 5** and **Figure 6** for double top plate wall configurations, and **Figure 7** and **Figure 8** for single top plate wall configurations.

6.2.3.1 Additional installation details are provided in **Section 9**.

Information contained in this report was developed using report holder's confidential intellectual property (IP) and trade secrets (TS), which is protected by Defend Trade Secrets Act 2016, © DrJ Engineering, LLC

Table 2. Allowable Uplift and Lateral Loads for Fasteners in Truss/Rafter to Double Top Plate Connections

Fastener	Fastener Length (in)	Fastener Angle to Vertical	Min. Penetration into Truss/Rafter[1] (in)	Allowable Loads[2,3,4,5,6,7] (lbf)								
				HF/SPF (0.42)			DF-L (0.50)			SP (0.55)		
				Uplift	F1	F2	Uplift	F1	F2	Uplift	F1	F2
LumberTite	4 1/2	0º	1.50	200	225	225	270	290	290	270	320	320
	6	22.5º	2.75	375	250	250	515	290	290	515	320	320
		0º	3.00	395	250	250	540	290	290	540	320	320
TimberTite	4	0º	1.00	130	185	185	180	230	230	180	260	260
	6	22.5º	2.75	375	250	250	515	290	290	515	320	320
		0º	3.00	395	250	250	540	290	290	540	320	320
Structural Lag Screw	4	0º	1.00	130	185	185	180	230	230	180	260	260
	6	22.5º	2.75	495	250	250	635	290	290	635	320	320
		0º	3.00	520	250	250	665	290	290	665	320	320

SI: 1 in = 25.4 mm, 1-lbf = 4.448 N

1. Wood truss or rafter members shall be a minimum of 2" nominal thickness. Design of truss or rafter is by others.
2. Equivalent specific gravity of Structural Composite Lumber (SCL) shall be equal to or greater than the specific gravities provided in this table. Refer to product information from SCL manufacturer.
3. For wood species with an assigned specific gravity between 0.42 and 0.50, use the tabulated values for a specific gravity of 0.42. For wood species with an assigned specific gravity between 0.50 and 0.55, use the tabulated values for a specific gravity of 0.50. For wood species with an assigned specific gravity greater than 0.55, use the tabulated values for a specific gravity of 0.55.
4. For applications involving members with different specific gravities, use the allowable load corresponding to the lowest specific gravity.
5. Includes C_d = 1.6 load duration increase factor for wind and seismic. No further increases permitted. Reduce design values for other load durations as applicable.
6. See Figure 4 for load directions. See Figure 5 through Figure 9 for installation details.
7. Fasteners can be installed at an upward angle from the vertical of 20° to 30° (22.5° is optimal; see Figure 5) or 0°, as shown in Figure 6. For installation between 20° and 30°, design values for 22.5° may be used.
8. No further duration of load increases permitted.

Information contained in this report was developed using report holder's confidential intellectual property (IP) and trade secrets (TS), which is protected by Defend Trade Secrets Act 2016, © DrJ Engineering, LLC

Table 3. Allowable Uplift and Lateral Loads for Fasteners in Truss/Rafter to Single Top Plate Connections

Fastener	Fastener Length (in)	Fastener Angle to Vertical	Min. Penetration into Truss/Rafter[1] (in)	Allowable Loads[2,3,4,5,6,7,8] (lbf)								
				HF/SPF (0.42)			DF-L (0.50)			SP (0.55)		
				Uplift	F1	F2	Uplift	F1	F2	Uplift	F1	F2
LumberTite	4 1/2	22.5º	2.88	220	240	240	280	290	290	280	320	320
		0º	3.00	210	240	240	270	290	290	270	320	320
	6	22.5º	4.38	220	240	240	280	290	290	280	320	320
		0º	4.50	210	240	240	270	290	290	270	320	320
TimberTite	4	22.5º	2.38	220	240	240	280	290	290	280	320	320
		0º	2.50	210	240	240	270	290	290	270	320	320
	6	22.5º	4.38	220	240	240	280	290	290	280	320	320
		0º	4.50	210	240	240	270	290	290	270	320	320
Structural Lag Screw	4	22.5º	2.38	270	240	240	345	290	290	345	320	320
		0º	2.50	260	240	240	335	290	290	335	320	320
	6	22.5º	4.38	270	240	240	345	290	290	345	320	320
		0º	4.50	260	240	240	335	290	290	335	320	320

SI: 1 in = 25.4 mm, 1-lbf = 4.448 N

1. Wood truss or rafter members shall be a minimum of 2" nominal thickness. Design of truss or rafter is by others.
2. Equivalent specific gravity of SCL shall be equal to or greater than the specific gravities provided in this table. Refer to product information from SCL manufacturer.
3. For wood species with an assigned specific gravity between 0.42 and 0.50, use the tabulated values for a specific gravity of 0.42. For wood species with an assigned specific gravity between 0.50 and 0.55, use the tabulated values for a specific gravity of 0.50. For wood species with an assigned specific gravity greater than 0.55, use the tabulated values for a specific gravity of 0.55.
4. For applications involving members with different specific gravities, use the allowable load corresponding to the lowest specific gravity.
5. Includes C_d = 1.6 load duration increase factor for wind and seismic. No further increases permitted. Reduce design values for other load durations as applicable.
6. See **Figure** 4 for load directions. See **Figure** 5 through **Figure** 9 for installation details.
7. Fasteners can be installed at an upward angle from the vertical of 20° to 30° (22.5° is optimal; see **Figure** 7) or 0° as shown in **Figure** 8. For installation between 20° and 30°, design values for 22.5° may be used.
8. No further duration of load increases permitted.

Information contained in this report was developed using report holder's confidential intellectual property (IP) and trade secrets (TS), which is protected by Defend Trade Secrets Act 2016, © DrJ Engineering, LLC

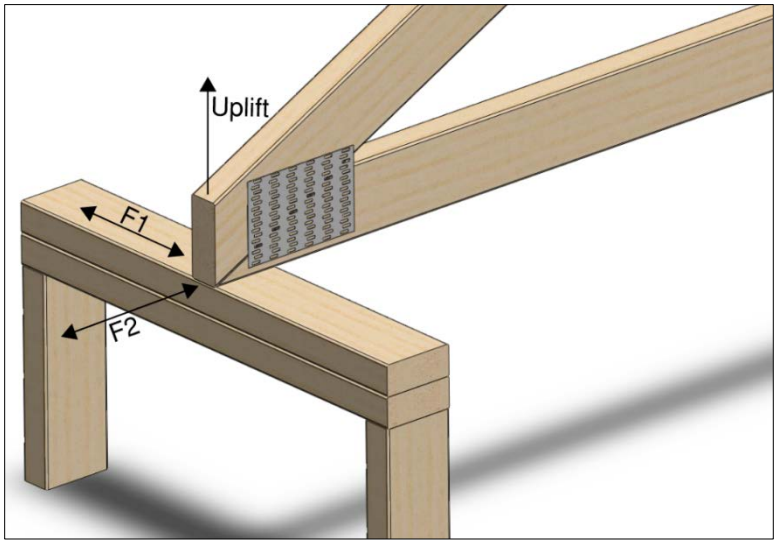

Figure 4. Uplift and Lateral Load Orientations

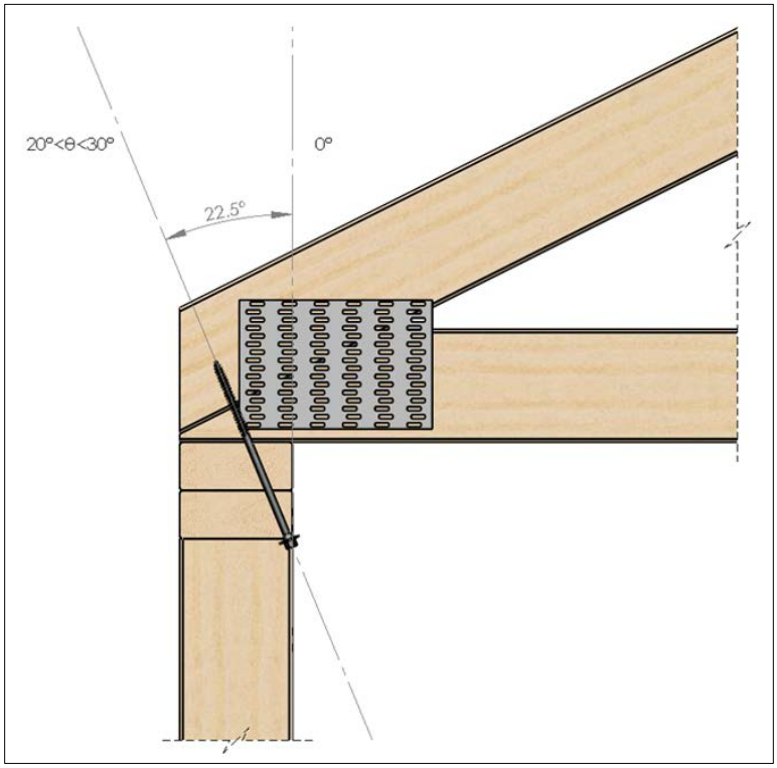

Figure 5. Installation of Fasteners at an Angle in Double Top Plate to Truss/Rafter Applications

Information contained in this report was developed using report holder's confidential intellectual property (IP) and trade secrets (TS), which is protected by Defend Trade Secrets Act 2016, © DrJ Engineering, LLC

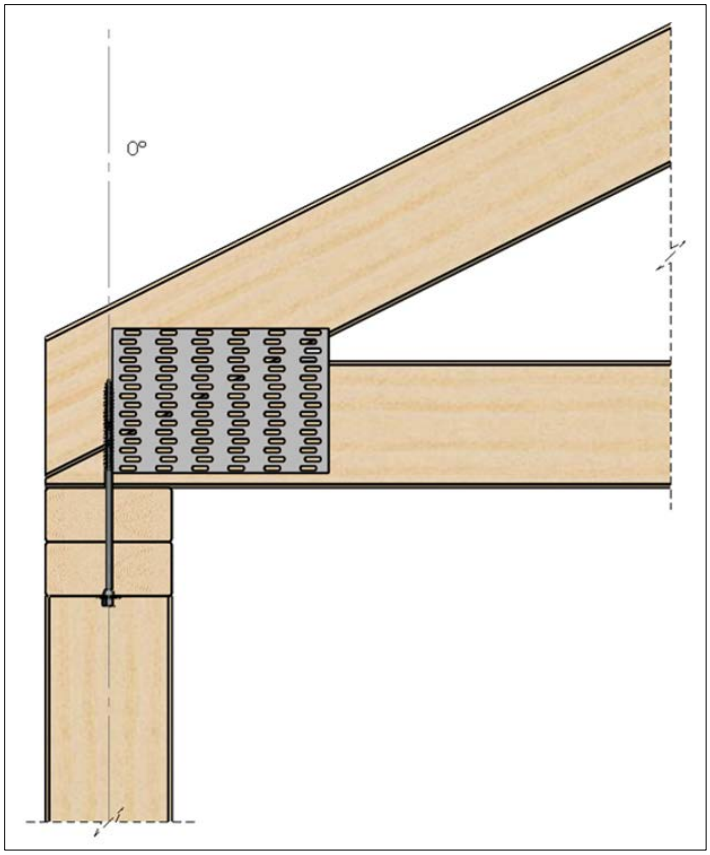

Figure 6. Installation of Fasteners in Double Top Plate Perpendicular to Truss/Rafter/Joist Applications

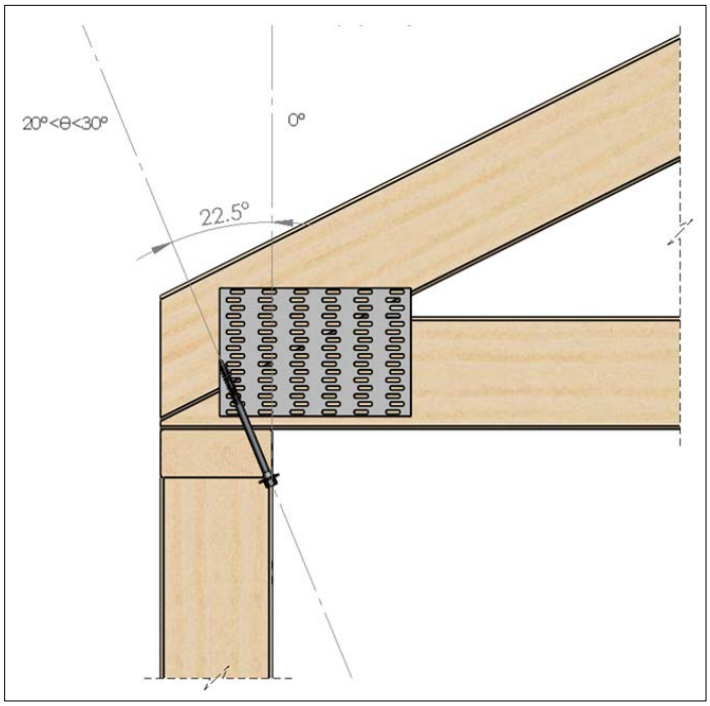

Figure 7. Installation of Fasteners at an Angle in Single Top Plate to Truss/Rafter Applications

Information contained in this report was developed using report holder's confidential intellectual property (IP) and trade secrets (TS), which is protected by Defend Trade Secrets Act 2016, © DrJ Engineering, LLC

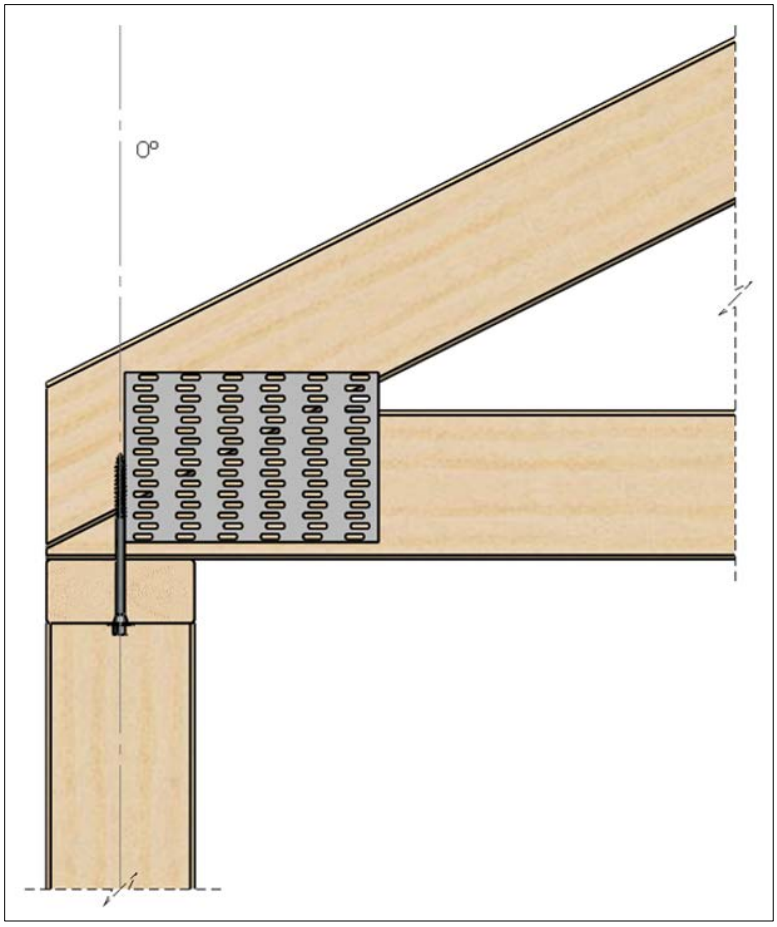

Figure 8. Installation of Fasteners in Single Top Plate Perpendicular to Truss/Rafter/Joist Applications

6.3 *Allowable Design Loads – Bottom Plate to Rim Board Connection*

6.3.1 Allowable design loads for lateral resistance parallel to grain in bottom plate to rim board connections are provided in **Table 4**. The connection configuration is shown in **Figure 9**.

6.3.1.1 A Wood Structural Panel (WSP) up to $1^1/_8$" thick is permitted between the rim board and the bottom plate provided it is independently fastened to the rim board per the building code and the minimum 2" screw penetration be met.

6.3.1.2 Double bottom plates are permitted so long as they are independently fastened per the building code and the minimum 2" screw penetration be met.

6.3.2 Allowable design loads are applicable to fasteners installed in accordance with **Figure 9** and **Section 9.6**.

Information contained in this report was developed using report holder's confidential intellectual property (IP) and trade secrets (TS), which is protected by Defend Trade Secrets Act 2016, © DrJ Engineering, LLC

Table 4. Allowable Shear Loads Parallel to Grain for Bottom Plate to Rim Board Connections

Fastener	Minimum Nominal Bottom Plate Thickness (in)	Minimum Penetration into Rim Board (in)	Allowable Shear Loads, Parallel to Grain (lbf)[1,2,3,4]								
			Rim Board Species (Specific Gravity)								
			2x HF/SPF (0.42)			2x DF-L or 1¼" **SCL (0.50)**			2x SP (0.55)		
			Bottom Plate Species (Specific Gravity)								
			HF/SPF (0.42)	DF-L (0.50)	SP (0.55)	HF/SPF (0.42)	DF-L (0.50)	SP (0.55)	HF/SPF (0.42)	DF-L (0.50)	SP (0.55)
LumberTite	2	2.0	150	165	175	160	180	190	165	190	200
TimberTite											
Structural Lag Screw											

SI: 1 in = 25.4 mm, 1-lbf = 4.448 N

1. For wood species with an assigned specific gravity between 0.42 and 0.50, use the tabulated values for a specific gravity of 0.42. For wood species with an assigned specific gravity between 0.50 and 0.55, use the tabulated values for a specific gravity of 0.50. For wood species with an assigned specific gravity greater than 0.55, use the tabulated values for a specific gravity of 0.55.
2. For applications involving members with different specific gravities, use the allowable load corresponding to the lowest specific gravity.
3. See Figure 4 for load directions. See Figure 5 through Figure 9 for installation details.
4. Tabulated loads are based on a load duration factor of C_D = 1.0. Loads may be increased for load duration per NDS.

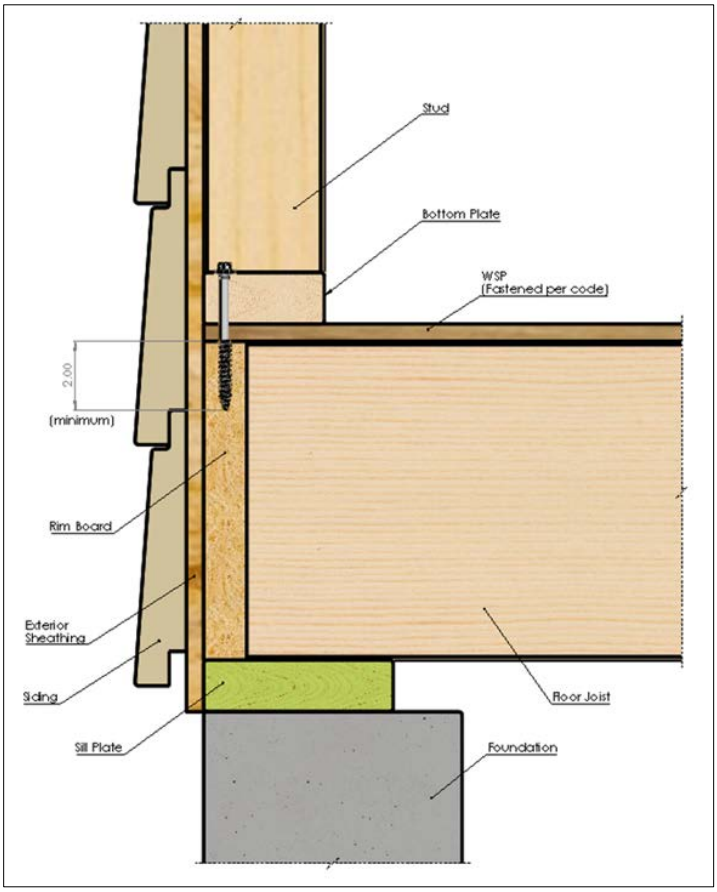

Figure 9. Fastener in Bottom Plate to Rim Board Connection

Information contained in this report was developed using report holder's confidential intellectual property (IP) and trade secrets (TS), which is protected by Defend Trade Secrets Act 2016, © DrJ Engineering, LLC

6.4 Alternative techniques shall be permitted in accordance with accepted engineering practice and experience. These provisions for the use of alternative materials, designs, and methods of construction are not intended to prevent the installation of any material or to prohibit any design or method of construction not specifically prescribed herein. This includes, but is not limited to, the following areas of engineering: mechanics of materials, structures, building science, and fire science.

7 Certified Performance[30]

7.1 All construction methods shall conform to accepted engineering practices to ensure durable, livable, and safe construction and shall demonstrate acceptable workmanship reflecting journeyman quality of work of the various trades.[31]

7.2 The strength and rigidity of the component parts and/or the integrated structure shall be determined by engineering analysis or by suitable load tests to simulate the actual loads and conditions of application that occur.[32]

8 Regulatory Evaluation and Accepted Engineering Practice

8.1 Power Pro Structural Wood Screws comply with the following legislatively adopted regulations and/or accepted engineering practice for the following reasons:

8.1.1 Power Pro Structural Wood Screws were evaluated using their tested allowable design values as an alternate means of attaching wood trusses, drag struts, and rafters to the top of the wall to provide uplift and lateral load resistance. The following conditions were evaluated:

8.1.1.1 Withdrawal strength of Power Pro Structural Wood Screws for use as an alternative to toenail connections, metal hurricane and seismic clips/straps, or nails in tension (uplift) loaded applications.

8.1.1.2 Shear strength of Power Pro Structural Wood Screws for use as an alternative to toenail connections, hurricane and seismic clips/straps, or nails in shear (lateral) loaded applications either parallel or perpendicular to wood grain.

8.1.1.3 Head pull-through strength of Power Pro Structural Wood Screws for use as an alternative to toenail connections, hurricane and seismic clips/straps, or nails in tension (uplift) loaded applications.

8.1.2 Power Pro Structural Wood Screws were evaluated as an alternate means of attaching wall bottom plates to the rim board. The fasteners were evaluated under the following conditions:

8.1.2.1 Shear strength to resist shear (lateral) loads applied parallel to the bottom plate and rim board.

8.2 Any building code, regulation and/or accepted engineering evaluations (e.g., research reports, duly authenticated reports, etc.) that are conducted for this Listing were performed by DrJ, which is an ISO/IEC 17065 accredited certification body and a professional engineering company operated by RDP or approved sources. DrJ is qualified[33] to practice product and regulatory compliance services within its scope of accreditation and engineering expertise,[34] respectively.

8.3 Engineering evaluations are conducted with DrJ's ANAB accredited ICS code scope of expertise, which is also its areas of professional engineering competence.

9 Installation

9.1 Installation shall comply with the approved construction documents, the manufacturer installation instructions, this report, and the applicable building code.

9.2 In the event of a conflict between the manufacturer installation instructions and this report, contact the manufacturer for counsel on the proper installation method.

Information contained in this report was developed using report holder's confidential intellectual property (IP) and trade secrets (TS), which is protected by Defend Trade Secrets Act 2016, © DrJ Engineering, LLC

9.3 *General Installation Procedure*

9.3.1 Fasteners shall be installed with a 1/2" (12.7 mm), low rpm/high torque electric drill (450 rpm).

9.3.2 Fasteners shall be installed with the bottom side of the flat region of the head flush to the surface of the wood member. Fasteners shall not be overdriven.

9.3.3 Fasteners shall not be struck with a hammer during installation.

9.3.4 Lead holes are not required but may be used where lumber is prone to splitting, using the provisions in the NDS.

9.4 *Spacing, Edge Distance, and End Distance*

9.4.1 1/4" Power Pro Structural Wood Screws spacing, edge distance, and end distances shall be as specified in **Table 5**.

Table 5. Screw Spacing, Edge Distance, and End Distance Requirements[1,2]

Connection Geometry	Minimum Spacing (in)
Edge Distance – Load in any direction	1/2
End Distance – Load parallel to grain, toward end	2 5/8
End Distance – Load perpendicular to grain, away from end	1 3/4
End Distance – Load perpendicular to grain	1 3/4
Spacing between Fasteners in a Row – Parallel to grain	2 5/8
Spacing between Fasteners in a Row – Perpendicular to grain	1 3/4
Spacing between Rows of Fasteners – In-line	7/8
Spacing between Rows of Fasteners – Staggered[2]	1/2

SI: 1 in = 25.4 mm

1. Edge distances, end distances, and spacing of fasteners shall be sufficient to prevent splitting of the wood or as shown in this table, whichever is more restrictive.
2. Values for *"Spacing between Rows of Fasteners – Staggered"* apply where the screws in adjacent rows are offset by one-half of the *"Spacing between Fasteners in a Row"*.

9.5 *Truss/Rafter to Top Plate Connection*

9.5.1 Select one of the Power Pro Structural Wood Screws listed in **Table 2** and **Table 3**.

9.5.2 Install fasteners upward through the wall top plates or wood structural framing member at the bottom corner of the top plate(s) and into the center of the wood truss or rafter. The fastener should be installed at an upward angle from the vertical of 20º to 30º (see **Figure 5** and **Figure 7**), and should penetrate the wood truss, rafter, or joist within 1/4" of the centerline.

9.5.3 Trusses/rafters located between studs may be installed at a 0º angle (see **Figure 6** and **Figure 8**).

9.5.3.1 Bearing distances between trusses/rafters and studs shall be within the provisions specified in IBC Section 2308.9.3.2[35] and IRC Section R602.3.2.

9.5.3.2 If the wood truss, rafter, or floor joist is located directly over a top plate splice, offset the fastener 1/4" to one side of the splice. ***Note:*** The splice may be in either top plate.

Information contained in this report was developed using report holder's confidential intellectual property (IP) and trade secrets (TS), which is protected by Defend Trade Secrets Act 2016, © DrJ Engineering, LLC

9.6 *Bottom Plate to Rim Board Connection*

9.6.1 Select one of the Power Pro Structural Wood Screws with a length sufficient to fully embed at least 2" into the rim board.

9.6.2 Install fasteners downward and perpendicular to the face of the wall bottom plate, a minimum of $^1/_2$" from the outside face of the wall, through the plate, and into the rim board (see **Figure 9**).

10 Substantiating Data

10.1 Testing has been performed under the supervision of a professional engineer and/or under the requirements of ISO/IEC 17025 as follows:

10.1.1 Connection design value calculations by DrJ Engineering, LLC in accordance with the NDS and accepted engineering practices.

10.1.2 Properties for Power Pro Structural Wood Screws from approved sources.

10.2 Information contained herein may include the result of testing and/or data analysis by sources that are approved agencies, approved sources, and/or an RDP. Accuracy of external test data and resulting analysis is relied upon.

10.3 Where applicable, testing and/or engineering analysis are based upon provisions that have been codified into law through state or local adoption of regulations and standards. The developers of these regulations and standards are responsible for the reliability of published content. DrJ's engineering practice may use a regulation-adopted provision as the control. A regulation-endorsed control versus a simulation of the conditions of application to occur establishes a new material as being equivalent to the regulatory provision in terms of quality, strength, effectiveness, fire resistance, durability, and safety.

10.4 The accuracy of the provisions provided herein may be reliant upon the published properties of raw materials, which are defined by the grade mark, grade stamp, mill certificate, or duly authenticated reports from approved agencies and/or approved sources provided by the supplier. These are presumed to be minimum properties and relied upon to be accurate. The reliability of DrJ's engineering practice, as contained in this duly authenticated report, may be dependent upon published design properties by others.

10.5 *Testing and Engineering Analysis*

10.5.1 The strength, rigidity, and/or general performance of component parts and/or the integrated structure are determined by suitable tests that simulate the actual conditions of application that occur and/or by accepted engineering practice and experience.[36]

10.6 Where additional condition of use and/or regulatory compliance information is required, please search for Power Pro Structural Wood Screws on the DrJ Certification website.

11 Findings

11.1 As outlined in **Section 6**, Power Pro Structural Wood Screws have performance characteristics that were tested and/or meet applicable regulations. In addition, they are suitable for use pursuant to its specified purpose.

11.2 When used and installed in accordance with this duly authenticated report and the manufacturer installation instructions, Power Pro Structural Wood Screws shall be approved for the following applications:

11.2.1 An acceptable means of attaching metal plate connected wood trusses, joists, or rafters to the tops of walls to provide uplift and lateral load resistance due to wind and seismic forces as provided in **Table 2** and **Table 3**.

11.2.2 An acceptable means of attaching wall bottom plate to rim board to provide lateral load resistance parallel to the bottom plate as provided in **Table 4**.

Information contained in this report was developed using report holder's confidential intellectual property (IP) and trade secrets (TS), which is protected by Defend Trade Secrets Act 2016, © DrJ Engineering, LLC

11.3 Unless exempt by state statute, when Power Pro Structural Wood Screws are to be used as a structural and/or building envelope component in the design of a specific building, the design shall be performed by an RDP.

11.4 Any application specific issues not addressed herein can be engineered by an RDP. Assistance with engineering is available from The Hillman Group.

11.5 IBC Section 104.2.3[37] (IRC Section R104.2.2[38] and IFC Section 104.2.3[39] are similar) in pertinent part state:

> 104.2.3 Alternative Materials, Design and Methods of Construction and Equipment. The provisions of this code are not intended to prevent the installation of any material or to prohibit any design or method of construction not specifically prescribed by this code, provided that any such alternative is not specifically prohibited by this code and has been approved.

11.6 **Approved:**[40] Building regulations require that the building official shall accept duly authenticated reports.[41]

11.6.1 An approved agency is *"approved"* when it is ANAB ISO/IEC 17065 accredited.

11.6.2 An approved source is *"approved"* when an RDP is properly licensed to transact engineering commerce.

11.6.3 Federal law, Title 18 US Code Section 242, requires that, where the alternative product, material, service, design, assembly, and/or method of construction is not approved, the building official shall respond in writing, stating the reasons why the alternative was not approved. Denial without written reason deprives a protected right to free and fair competition in the marketplace.

11.7 DrJ is a licensed engineering company, employs licensed RDPs and is an ANAB Accredited Product Certification Body – Accreditation #1131.

11.8 Through the IAF Multilateral Arrangement (MLA), this duly authenticated report can be used to obtain product approval in any jurisdiction or country because all ANAB ISO/IEC 17065 duly authenticated reports are equivalent.[42]

12 Conditions of Use

12.1 As defined in **Section 6**, where material and/or engineering mechanics properties are created for load resisting design purposes, the resistance to the applied load shall not exceed the ability of the defined properties to resist those loads using the principles of accepted engineering practice.

12.2 As listed herein, Power Pro Structural Wood Screws shall be used:

12.2.1 In sawn lumber with moisture contents less than or equal to nineteen percent (19%).

12.2.2 In SCL members with moisture content less than or equal to sixteen percent (16%).

12.3 As listed herein, Power Pro Structural Wood Screws can be used in:

12.3.1 Chemically (pressure preservative and fire-retardant) treated wood with no limitations with respect to moisture content of the treated wood.

12.3.1.1 ***Note:*** **Section 12.3.1** and **Section 12.3.2** must still be followed.

12.3.2 Untreated wood with no limitation with respect to moisture content of the untreated wood.

12.4 When installed in preservative-treated wood or fire-retardant treated wood, connections shall be designed using the treatment manufacturer reductions for connections.

12.5 For conditions not covered in this report, connections shall be designed in accordance with generally accepted engineering practices. When the capacity of a connection is controlled by fastener strength rather than wood strength, the metal strength value shall not be increased by the adjustment factors specified in the NDS.

Information contained in this report was developed using report holder's confidential intellectual property (IP) and trade secrets (TS), which is protected by Defend Trade Secrets Act 2016, © DrJ Engineering, LLC

12.6 When required by adopted legislation and enforced by the building official, also known as the Authority Having Jurisdiction (AHJ) in which the project is to be constructed:

12.6.1 Any calculations incorporated into the construction documents shall conform to accepted engineering practice and, when prepared by an approved source, shall be approved when signed and sealed.

12.6.2 This report and the installation instructions shall be submitted at the time of permit application.

12.6.3 At a minimum, these innovative products shall be installed per **Section 9**.

12.6.4 The review of this report by the AHJ shall comply with IBC Section 104.2.3.2 and IBC Section 105.3.1.

12.6.5 These innovative products have an internal quality control program and a third party quality assurance program in accordance with IBC Section 104.7.2, IBC Section 110.4, IBC Section 1703, IRC Section R104.7.2, and IRC Section R109.2.

12.6.6 The application of these innovative products in the context of this report is dependent upon the accuracy of the construction documents, implementation of installation instructions, inspection as required by IBC Section 110.3, IRC Section R109.2, and any other regulatory requirements that may apply.

12.7 The approval of this report by the AHJ shall comply with IBC Section 1707.1, where legislation states in part, *"the building official shall make, or cause to be made, the necessary tests and investigations; or the building official shall accept duly authenticated reports from approved agencies in respect to the quality and manner of use of new materials or assemblies as provided for in Section 104.2.3"*, all of IBC Section 104, and IBC Section 105.3.

12.8 Design loads shall be determined in accordance with the regulations adopted by the jurisdiction in which the project is to be constructed and/or by the building designer (i.e., owner or RDP).

12.9 The actual design, suitability, and use of this report for any particular building, is the responsibility of the owner or the authorized agent of the owner.

13 Identification

13.1 Power Pro Structural Wood Screws (Power Pro LumberTite Structural Wood Screws, Power Pro TimberTite Structural Wood Screws, and Power Pro Structural Lag Screws), as listed in **Section 1.1**, are identified by a label on the board or packaging material bearing the manufacturer name, product name, this report number, and other information to confirm code compliance.

13.2 Additional technical information can be found at www.hillmangroup.com .

14 Review Schedule

14.1 This report is subject to periodic review and revision. For the latest version, visit www.drjcertification.org.

14.2 For information on the status of this report, please contact DrJ Certification.

Information contained in this report was developed using report holder's confidential intellectual property (IP) and trade secrets (TS), which is protected by Defend Trade Secrets Act 2016, © DrJ Engineering, LLC

Notes

1 For more information, visit drjcertification.org or call us at 608-310-6748.

2 2021 IRC Section R317.3

3 2021 IRC Section R317.3

4 Capitalized terms and responsibilities are defined pursuant to the applicable building code, applicable reference standards, the latest edition of TPI 1, the NDS, AISI S202, US professional engineering law, Canadian building code, Canada professional engineering law, Qualtim External Appendix A: Definitions/Commentary, Qualtim External Appendix B: Project/Deliverables, Qualtim External Appendix C: Intellectual Property and Trade Secrets, definitions created within Design Drawings and/or definitions within Reference Sheets. Beyond this, terms not defined shall have ordinarily accepted meanings as the context implies. Words used in the present tense include the future; words stated in the masculine gender include the feminine and neuter; the singular number includes the plural and the plural, the singular.

5 https://up.codes/viewer/mississippi/ibc-2024/chapter/17/special-inspections-and-tests#1702

6 Alternative Materials, Design and Methods of Construction and Equipment: The provisions of any regulation code are not intended to prevent the installation of any material or to prohibit any design or method of construction not specifically prescribed by a regulation. Please review https://www.justice.gov/atr/mission and https://up.codes/viewer/mississippi/ibc-2024/chapter/1/scope-and-administration#104.2.3

7 https://up.codes/viewer/mississippi/ibc-2024/chapter/17/special-inspections-and-tests#1706.2:~:text=the%20design%20strengths%20and%20permissible%20stresses%20shall%20be%20established%20by%20tests

8 The design strengths and permissible stresses of any structural material shall conform to the specifications and methods of design of accepted engineering practice. https://up.codes/viewer/mississippi/ibc-2024/chapter/17/special-inspections-and-tests#1706.1:~:text=Conformance%20to%20Standards-,The%20design%20strengths%20and%20permissible%20stresses,-of%20any%20structural

9 https://up.codes/viewer/mississippi/ibc-2024/chapter/17/special-inspections-and-tests#1707.1:~:text=the%20building%20official%20shall%20make%2C%20or%20cause%20to%20be%20made%2C%20the%20necessary%20tests%20and%20investigations%3B%20or%20the%20building%20official%20shall%20accept%20duly%20authenticated%20reports%20from%20approved%20agencies%20in%20respect%20to%20the%20quality%20and%20manner%20of%20use%20of%20new%20materials%20or%20assemblies%20as%20provided%20for%20in%20Section%20104.2.3.

10 https://up.codes/viewer/mississippi/ibc-2024/chapter/17/special-inspections-and-tests#1703.4.2

11 https://up.codes/viewer/mississippi/ibc-2024/chapter/2/definitions#approved_agency

12 https://up.codes/viewer/mississippi/ibc-2024/chapter/2/definitions#approved_source

13 https://www.law.cornell.edu/uscode/text/18/1832 (b) Any organization that commits any offense described in subsection (a) shall be fined not more than the greater of $5,000,000 or 3 times the value of the stolen trade secret to the organization, including expenses for research and design and other costs of reproducing the trade secret that the organization has thereby avoided. The federal government and each state have a public records act. To follow DTSA and comply state public records and trade secret legislation requires approval through ANAB ISO/IEC 17065 accredited certification bodies or approved sources. For more information, please review this website: Intellectual Property and Trade Secrets.

14 https://www.nspe.org/resources/issues-and-advocacy/professional-policies-and-position-statements/regulation-professional AND https://apassociation.org/list-of-engineering-boards-in-each-state-archive/

15 https://www.cbitest.com/accreditation/

16 https://up.codes/viewer/mississippi/ibc-2024/chapter/1/scope-and-administration#104.1:~:text=directed%20to%20enforce%20the%20provisions%20of%20this%20code

17 https://up.codes/viewer/mississippi/ibc-2024/chapter/1/scope-and-administration#104.2.3 AND https://up.codes/viewer/mississippi/ibc-2024/chapter/1/scope-and-administration#105.3.1

18 https://up.codes/viewer/mississippi/ibc-2024/chapter/17/special-inspections-and-tests#1707.1

19 https://iaf.nu/en/about-iaf-mla/#:~:text=Once%20an%20accreditation%20body%20is%20a%20signatory%20of%20the%20IAF%20MLA%2C%20it%20is%20required%20to%20recognise%20certificates%20and%20validation%20and%20verification%20statements%20issued%20by%20conformity%20assessment%20bodies%20accredited%20by%20all%20other%20signatories%20of%20the%20IAF%20MLA%2C%20with%20the%20appropriate%20scope

20 True for all ANAB accredited product evaluation agencies and all International Trade Agreements.

21 https://www.justice.gov/crt/deprivation-rights-under-color-law AND https://www.justice.gov/atr/mission

22 Unless otherwise noted, the links referenced herein use un-amended versions of the 2024 International Code Council (ICC) 2024 International Code Council (ICC) model codes as foundation references. Mississippi versions of the IBC 2024 and the IRC 2024 are un-amended. This material, product, design, service and/or method of construction also complies with the 2000-2012 versions of the referenced codes and the standards referenced therein. As pertinent to this technical and code compliance evaluation, CBI and/or DrJ staff have reviewed any state or local regulatory amendments to assure this report is in compliance.

23 See Adoptions by Publisher for the latest adoption of a non-amended or amended model code by the local jurisdiction. https://up.codes/codes/general

24 See Adoptions by Publisher for the latest adoption of a non-amended or amended model code by state. https://up.codes/codes/general

25 https://www.ecfr.gov/current/title-24/subtitle-B/chapter-XX/part-3282/subpart-A/section-3282.14

26 https://www.ecfr.gov/current/title-24/subtitle-B/chapter-XX/part-3280

27 https://www.ecfr.gov/current/title-24/subtitle-B/chapter-XX/part-3280#p-3280.2(Listed%20or%20certified); https://up.codes/viewer/mississippi/ibc-2024/chapter/2/definitions#listed AND https://up.codes/viewer/mississippi/ibc-2024/chapter/2/definitions#labeled

28 2021 IBC Section 2308.5.3.2

29 2021 IBC Section 2308.5.3.2

30 https://up.codes/viewer/mississippi/ibc-2024/chapter/17/special-inspections-and-tests#1703.4

31 https://www.ecfr.gov/current/title-24/subtitle-B/chapter-XX/part-3280#:~:text=All%20construction%20methods%20shall%20be%20in%20conformance%20with%20accepted%20engineering%20practices%20to%20insure%20durable%2C%20livable%2C%20and%20safe%20housing%20and%20shall%20demonstrate%20acceptable%20workmanship%20reflecting%20journeyman%20quality%20of%20work%20of%20the%20various%20trades

Information contained in this report was developed using report holder's confidential intellectual property (IP) and trade secrets (TS), which is protected by Defend Trade Secrets Act 2016, © DrJ Engineering, LLC

[32] https://www.ecfr.gov/current/title-24/subtitle-B/chapter-XX/part-3280#:~:text=The%20strength%20and%20rigidity%20of%20the%20component%20parts%20and/or%20the%20integrated%20structure%20shall%20be%20determined%20by%20engineering%20analysis%20or%20by%20suitable%20load%20tests%20to%20simulate%20the%20actual%20loads%20and%20conditions%20of%20application%20that%20occur

[33] Qualification is performed by a legislatively defined Accreditation Body. ANSI National Accreditation Board (ANAB) is the largest independent accreditation body in North America and provides services in more than 75 countries. DrJ is an ANAB accredited product certification body.

[34] https://anabpd.ansi.org/Accreditation/product-certification/AllDirectoryDetails?prgID=1&orgID=2125&statusID=4#:~:text=Bill%20Payment%20Date-,Accredited%20Scopes,-13%20ENVIRONMENT.%20HEALTH

[35] 2021 IBC Section 2308.5.3.2

[36] See Code of Federal Regulations (CFR) Title 24 Subtitle B Chapter XX Part 3280 for definition: https://www.ecfr.gov/current/title-24/subtitle-B/chapter-XX/part-3280

[37] 2021 IBC Section 104.11

[38] 2021 IRC Section R104.11

[39] 2018: https://up.codes/viewer/wyoming/ifc-2018/chapter/1/scope-and-administration#104.9 AND 2021: https://up.codes/viewer/wyoming/ibc-2021/chapter/1/scope-and-administration#104.11

[40] Approved is an adjective that modifies the noun after it. For example, Approved Agency means that the Agency is accepted officially as being suitable in a particular situation. This example conforms to IBC/IRC/IFC Section 201.4 (https://up.codes/viewer/mississippi/ibc-2024/chapter/2/definitions#201.4) where the building code authorizes sentences to have an ordinarily accepted meaning such as the context implies.

[41] https://up.codes/viewer/mississippi/ibc-2024/chapter/17/special-inspections-and-tests#1707.1

[42] Multilateral approval is true for all ANAB accredited product evaluation agencies and all International Trade Agreements.

Information contained in this report was developed using report holder's confidential intellectual property (IP) and trade secrets (TS), which is protected by Defend Trade Secrets Act 2016, © DrJ Engineering, LLC