Listing and Technical Evaluation Report™

A Duly Authenticated Report from an Approved Agency

Report No: 2307-04

Issue Date: October 17, 2023

Revision Date: September 4, 2026

Subject to Renewal: October 1, 2027

Power Pro® Structural Wood Screws for Ledger Connections

Trade Secret Report Holder:

The Hillman™ Group

Phone: 513-851-4900 Website: www.hillmangroup.com Email: info@hillmangroup.com

CSI Designations:

DIVISION: 06 00 00 - WOOD, PLASTICS AND COMPOSITES

Section: 06 05 23 - Wood, Plastic, and Composite Fastenings

Section: 06 11 00 - Wood Framing

Section: 06 15 00 - Wood Decking

1 Innovative Products Evaluated[1]

1.1 Power Pro Structural Wood Screws:

1.1.1 Power Pro LedgerTite Structural Wood Screws

1.1.2 Power Pro Structural Lag Screws

1.1.3 Power Pro TimberWood Structural Screws

2 Product Description and Materials

2.1 The innovative products evaluated in this report are shown in **Figure 1**, **Figure 2**, and **Figure 3**.



Figure 1. Power Pro LedgerTite Structural Wood Screw

Information contained in this report was developed using report holder's confidential intellectual property (IP) and trade secrets (TS), which is protected by Defend Trade Secrets Act 2016, © DrJ Engineering, LLC



Figure 2. Power Pro Structural Lag Screw

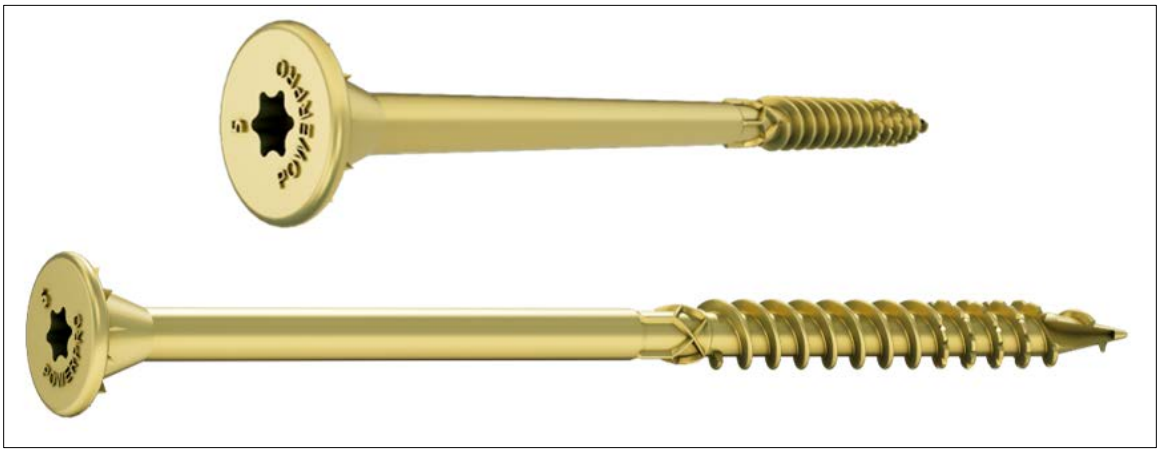

Figure 3. Power Pro TimberWood Structural Screw

2.2 *General*

2.2.1 Power Pro Structural Wood Screws are partially threaded, self-drilling dowel-type fasteners that are manufactured using standard cold forming processes and are subsequently heat-treated and coated with a proprietary coating comprising of a zinc layer and an organic topcoat.

2.2.2 LedgerTite fasteners are $^{5}/_{16}$" hex-driven screws with an integrated washer.

2.2.3 Structural Lag Screws are Torx-driven screws with a flattened truss head.

2.2.4 TimberWood Structural Screws are Torx-driven screws with a flat countersinking head.

2.3 *Fastener Material*

2.3.1 Power Pro Structural Wood Screws are made of hardened carbon steel.

Information contained in this report was developed using report holder's confidential intellectual property (IP) and trade secrets (TS), which is protected by Defend Trade Secrets Act 2016, © DrJ Engineering, LLC

2.4 *Corrosion Resistance*

2.4.1 Power Pro Structural Wood Screws may be used where screws are required to exhibit corrosion resistance when exposed to adverse environmental conditions, which are subject to the limitations of this report. Power Pro Structural Wood Screws have been evaluated for use in wood treated with ACQ-D preservatives with a retention of 0.40-pcf (6.4 kg/m^3) and may be used as an alternative to hot-dip galvanized fasteners in wood treated with preservatives or less corrosive effects meeting ASTM A153, Class D (IBC Section 2304.10.6 and IRC Section R304.3[2]).

2.4.2 Power Pro Structural Wood Screws have a proprietary coating, which may be used as an alternative to the protection provided by code-approved hot-dipped galvanized coatings meeting ASTM A153, Class D (IBC Section 2304.10.6 and IRC Section R304.3[3]).

2.5 *Pressure-Preservative Treated (PPT) Wood Applications*

2.5.1 Power Pro Structural Wood Screws, having the proprietary coating, are recognized for use in PPT lumber provided the conditions set forth by the PPT lumber manufacturer be met, including appropriate strength reductions.

2.6 *Fire-Retardant Treated (FRT) Wood Applications*

2.6.1 Power Pro Structural Wood Screws, with the proprietary coating, are recognized for use in FRT lumber provided the conditions set forth by the FRT lumber manufacturer be met, including appropriate strength reductions.

2.7 *Wood Members*

2.7.1 Solid sawn wood members connected with Power Pro Structural Wood Screws shall consist of lumber species or species combinations having a specific gravity of 0.42 to 0.55.

2.7.2 Structural composite lumber (e.g., LVL, LSL, PSL, etc.) connected with Power Pro Structural Wood Screws shall be recognized in evaluation reports having published equivalent specific gravities for lateral and withdrawal resistance. Equivalent specific gravities for structural composite lumber may be used in the design of connections using the specific gravities of the sawn lumber shown in **Table 2**.

2.8 *Fastener Specifications*

2.8.1 **Table 1** lists the dimensions and mechanical properties of the Power Pro Structural Wood Screws as evaluated in this report.

Information contained in this report was developed using report holder's confidential intellectual property (IP) and trade secrets (TS), which is protected by Defend Trade Secrets Act 2016, © DrJ Engineering, LLC

Table 1. Fastener Specifications

Fastener Name	Nominal Diameter (in)	Length[1] (in)	Thread Length[2] (in)	Head Diameter[3] (in)	Unthreaded Shank Diameter (in)	Thread Diameter (in)		Nominal Bending Yield (psi)	Tensile Strength (lbf)	
						Minor	Major		ASD	LFRD
Power Pro LedgerTite Structural Wood Screws	5/16	3 5/8	2.00	0.610	0.204	0.181	0.284	180,000	970	1,460
		5	3.00							
Power Pro Structural Lag Screws	5/16	3 1/2	2.20	0.630	0.204	0.181	0.284	180,000	970	1,460
		4	2.60							
		5	3.50							
		6	4.00							
Power Pro TimberWood Structural Screws	5/16	3	2.10	0.630	0.204	0.181	0.284	180,000	970	1,460
		4	2.60							
		5	3.50							
		6	4.00							

SI: 1 in = 25.4 mm, 1-psi = 0.00689 MPa, 1-lbf = 4.448 N

1. Measured from the underside of the head to the tip
2. Includes tip.
3. Nominal diameter of the washer head.

2.9 As needed, review material properties for design in **Section 6** and the regulatory evaluation in **Section 8**.

3 Definitions[4]

3.1 New Materials[5] are defined as building materials, equipment, appliances, systems, or methods of construction, not provided for by prescriptive and/or legislatively adopted regulations, known as alternative materials.[6] The design strength and permissible stresses shall be established by tests[7] and/or engineering analysis.[8]

3.2 Duly authenticated reports[9] and research reports[10] are test reports and related engineering evaluations that are written by an approved agency[11] and/or an approved source.[12]

3.2.1 This report utilizes intellectual property and/or trade secrets to create public domain material properties for commercial end-use.

3.2.1.1 This report protects confidential Intellectual Property and trade secrets under the regulation, 18.US.Code.90, also known as Defend Trade Secrets Act of 2016 (DTSA).[13]

3.3 An approved agency is *"approved"* when it is ANAB ISO/IEC 17065 accredited. DrJ Engineering, LLC (DrJ) is accredited and listed in the ANAB directory.

3.4 An approved source is *"approved"* when a professional engineer (i.e., Registered Design Professional, hereinafter RDP) is properly licensed to transact engineering commerce. The regulatory authority governing approved sources is the state legislature via its professional engineering regulations.[14]

3.5 Testing and/or inspections conducted for this duly authenticated report were performed by an ISO/IEC 17025 accredited testing laboratory, an ISO/IEC 17020 accredited inspection body, and/or a licensed RDP.

3.5.1 The Center for Building Innovation (CBI) is ANAB[15] ISO/IEC 17025 and ISO/IEC 17020 accredited.

Information contained in this report was developed using report holder's confidential intellectual property (IP) and trade secrets (TS), which is protected by Defend Trade Secrets Act 2016, © DrJ Engineering, LLC

3.6 The regulatory authority shall enforce[16] the specific provisions of each legislatively adopted regulation. If there is a non-conformance, the specific regulatory section and language of the non-conformance shall be provided in writing[17] stating the nonconformance and the path to its cure.

3.7 The regulatory authority shall accept duly authenticated reports from an approved agency and/or an approved source with respect to the quality and manner of use of new materials or assemblies as provided for in regulations regarding the use of alternative materials, designs, or methods of construction.[18]

3.8 ANAB is an International Accreditation Forum (IAF) Multilateral Recognition Arrangement (MLA) signatory. Therefore, recognition of certificates and validation statements issued by conformity assessment bodies accredited by all other signatories of the IAF MLA with the appropriate scope shall be approved.[19] Thus, all ANAB ISO/IEC 17065 duly authenticated reports are approval equivalent,[20] and can be used in any country that is an MLA signatory found at this link: https://iaf.nu/en/recognised-abs/

3.9 Approval equity is a fundamental commercial and legal principle.[21]

4 Applicable Local, State, and Federal Approvals; Standards; Regulations[22]

4.1 *Local, State, and Federal*

4.1.1 Approved in all local jurisdictions pursuant to ISO/IEC 17065 duly authenticated report use, which includes, but is not limited to, the following featured local jurisdictions: Austin, Baltimore, Broward County, Chicago, Clark County, Dade County, Dallas, Detroit, Denver, DuPage County, Fort Worth, Houston, Kansas City, King County, Knoxville, Las Vegas, Los Angeles City, Los Angeles County, Miami, Nashville, New York City, Omaha, Philadelphia, Phoenix, Portland, San Antonio, San Diego, San Jose, San Francisco, Seattle, Sioux Falls, South Holland, St. Louis County, Texas Department of Insurance, and Wichita.[23]

4.1.2 Approved in all state jurisdictions pursuant to ISO/IEC 17065 duly authenticated report use, which includes, but is not limited to, the following featured states: California, Florida, New Jersey, Oregon, New York, Texas, Washington, and Wisconsin.[24]

4.1.3 Approved by the Code of Federal Regulations Manufactured Home Construction: Pursuant to Title 24, Subtitle B, Chapter XX, Part 3282.14[25] and Part 3280[26] pursuant to the use of ISO/IEC 17065 duly authenticated reports.

4.1.4 Approved means complying with the requirements of local, state, or federal legislation.

4.2 *Regulations*

4.2.1 *IBC – 18, 21, 24: International Building Code®*

4.2.2 *IRC – 18, 21, 24: International Residential Code®*

4.2.3 *IECC – 18, 21, 24: International Energy Conservation Code®*

4.3 *Standards*

4.3.1 *ANSI/AWC NDS: National Design Specification (NDS) for Wood Construction*

4.3.2 *ASTM A153: Standard Specification for Zinc Coating (Hot-Dip) on Iron and Steel Hardware*

4.3.3 *ASTM D1761: Standard Test Methods for Mechanical Fasteners in Wood and Wood-Based Materials*

4.3.4 *ASTM F1575-21: Standard Test Method for Determining Bending Yield Moment of Nails*

4.3.5 *AWC TR12: General Dowel Equations for Calculating Lateral Connection Values*

Information contained in this report was developed using report holder's confidential intellectual property (IP) and trade secrets (TS), which is protected by Defend Trade Secrets Act 2016, © DrJ Engineering, LLC

5 Listed[27]

5.1 Equipment, materials, products, or services included in a List published by a nationally recognized testing laboratory (e.g., CBI), an approved agency (e.g., CBI and DrJ), and/or an approved source (e.g., DrJ), or other organization(s) concerned with product evaluation (e.g., DrJ), that maintains periodic inspection (e.g., CBI) of production of listed equipment or materials, and whose listing states either that the equipment or material meets nationally recognized standards or has been tested and found suitable for use in a specified manner.

6 Tabulated Properties Generated from Nationally Recognized Standards

6.1 *General*

6.1.1 Power Pro Structural Wood Screws are designed to attach the deck ledger to the band joist of a building in accordance with IBC Section 1604.8.3 and IRC Section R507.9.

6.1.1.1 Where a band joist is not used, as in some truss installations, an engineered design is required. See **Appendix A** for additional code requirements for ledger attachments.

6.1.2 The IRC provides prescriptive fastener spacing for the attachment of a deck ledger to a band joist with $^1/_2$" diameter lag screws or through bolts as shown in IRC Table R507.9.1.3(1).

6.1.2.1 **Table 2** provides the spacing required to provide performance at least equivalent to the lag screws found in IRC Table R507.9.1.3(1), in accordance with IBC Section 104.2.3,[28] IBC Section 1604.8.3, IRC Section R104.2.2,[29] and IRC Section R507.9, and in accordance with generally accepted engineering practice.

6.1.2.1.1 **Table 2** provides screw spacing for materials found in IRC Section R507.9, as well as a wider range of materials commonly used for rim joists. Screw spacing values are provided for four loading conditions.

6.1.2.2 When installed in accordance with the spacing requirements of **Table 2**, Power Pro Structural Wood Screws provide equivalent performance to IRC Table R507.9.1.3(1).

6.1.3 Unless otherwise noted, adjustment of the design stresses for duration of load shall be in accordance with the applicable code.

6.1.3.1 In addition, an alternate loading condition (i.e., deck snow load = 60-psf, deck dead load = 10-psf) required by some jurisdictions is shown.

6.1.4 Power Pro Structural Wood Screws are installed without lead holes.

6.1.4.1 When a bored hole is desired to prevent splitting of wood, provisions in the NDS Chapter 12 shall be followed.

Information contained in this report was developed using report holder's confidential intellectual property (IP) and trade secrets (TS), which is protected by Defend Trade Secrets Act 2016, © DrJ Engineering, LLC

Table 2. Fastener Spacings for Deck Ledger Attachment

Fastener	Loading Condition (psf)	2x Nominal Ledger Species[7]	Band Joist Material[3,8]	Maximum On-center Spacing of Power Pro Structural Wood Screws (in)						
				Maximum Deck Joist Spans[1,2,4,5,6]						
				Up to 6'	Up to 8'	Up to 10'	Up to 12'	Up to 14'	Up to 16'	Up to 18'
LedgerTite or Structural Lag Screw or TimberWood Structural Screw	LL + DL 40 + 10	DF/SP	Sawn Lumber / SCL	20	15	12	10	8	7	6
		HF/SPF	Sawn Lumber / SCL	16	12	9	8	7	6	5
	SL + DL 50 + 10	DF/SP	Sawn Lumber/SCL	19	14	11	9	8	7	6
		HF/SPF	Sawn Lumber / SCL	15	11	9	7	6	5	5
	SL + DL 60 + 10	DF/SP	Sawn Lumber / SCL	16	12	10	8	7	6	5
		HF/SPF	Sawn Lumber / SCL	13	10	8	6	5	5	4
	SL + DL 70 + 10	DF/SP	Sawn Lumber / SCL	14	10	8	7	6	5	4
		HF/SPF	Sawn Lumber / SCL	11	8	7	5	5	4	3

SI: 1 in = 25.4 mm, 1-psf = 0.0479 kN/m^2

1. Based on load duration, C_d, of 1.0 for live load conditions, and 1.15 for snow load conditions. Spacing may be adjusted by the applicable load duration for other conditions as specified in the NDS. Fastener spacings are applicable to Power Pro Structural Wood Screws.
2. Fasteners are required to have full thread penetration into the main member. Minimum fastener length to be used is 3".
3. Solid sawn band joists shall be HF/SPF or SP/DF species (specific gravity of 0.42 and 0.50 respectively).
4. Fastener spacing is based on published design values from approved agencies.
5. Fasteners shall be staggered from the top to the bottom along the length of the ledger while maintaining the required edge and end distances shown in Figure 4.
6. A maximum $^1/_2$" structural sheathing may be installed between the ledger and the band joist.
7. Minimum ledger board requirements: 1.5" thickness and 7.25" depth
8. Minimum band joist requirements: Specific gravity of 0.42 for sawn lumber and 0.50 for SCL; Sawn Lumber band joist 1.5" thick and 7.25" depth; SCL band joist 1.0" thick and 7.25" depth

6.1.5 Allowable loads for deck ledger to stud connections installed with Power Pro Structural Wood Screws are presented in **Table 3**.

6.1.5.1 Values in **Table 3** apply where the ledger is installed, either directly over the studs, or with up to two layers of $^5/_8$" gypsum wallboards between the ledger and studs.

Information contained in this report was developed using report holder's confidential intellectual property (IP) and trade secrets (TS), which is protected by Defend Trade Secrets Act 2016, © DrJ Engineering, LLC

Table 3. Power Pro Structural Wood Screws Allowable Loads for Ledger to Stud Attachment With or Without Gypsum Wallboard (GWB)

Fastener	Fastener Size	Penetration into Main Member (in)	Layers of GWB[7]	Allowable Load per Stud Connection[3,4,5,6] (lbf)	
				Ledger Size[1,2]	
				2 x 6 or 2 x 8	2 x 10
LedgerTite	5/16" x 3 5/8"	2 1/8	0	360	540
		1 1/2	1	235	353
	5/16" x 5"	2 7/8	1	260	390
		2 1/4	2	190	285
Structural Lag Screw or TimberWood Structural Screw	5/16" x 3"	1 1/2	0	310	465
	5/16" x 3 1/2"	2	0	360	540
	5/16" x 4"	2 1/2	0	360	540
		1 7/8	1	260	390
	5/16" x 5"	2 7/8	1	260	390
		2 1/4	2	190	285
	5/16" x 6"	3 1/4	2	190	285

SI: 1 in = 25.4 mm, 1-lbf = 4.448 N

1. Two fasteners per stud are required for 2" x 6" and 2" x 8" ledger connections. Three fasteners per stud are required for 2" x 10" ledger connections. Additional fasteners are prohibited.
2. Ledger and studs with minimum specific gravity of 0.42.
3. The tabulated values apply where the ledger is installed either directly over the studs or with up to two layers of 5/8" gypsum between the ledger and studs.
4. Allowable loads shall be limited to parallel-to-grain loaded solid sawn main members (minimum 2" nominal). Wood side members shall be loaded perpendicular to grain.
5. Allowable loads are shown at the wood load duration factor of C_D = 1.0. Loads may be increased for load duration as permitted by the building code up to a C_D = 1.60. All adjustment factors shall be applied per the NDS. For in-service moisture content greater than nineteen percent (19%), use Wet Service Factor (C_M) = 0.70.
6. Fasteners shall be centered in the stud and spaced as shown in Figure 5 through Figure 15. The stud minimum end distance is 6 3/4" when loaded toward the end and 4" when loaded away from the end. The ledger end distance is 6" for full values. For ledger end distances under 6", the reference connection design values shall be adjusted in accordance with NDS Section 12.5.
7. GWB must be attached as required per the building code.

6.2 Alternative techniques shall be permitted in accordance with accepted engineering practice and experience. These provisions for the use of alternative materials, designs, and methods of construction are not intended to prevent the installation of any material or to prohibit any design or method of construction not specifically prescribed herein. This includes, but is not limited to, the following areas of engineering: mechanics of materials, structures, building science, and fire science.

Information contained in this report was developed using report holder's confidential intellectual property (IP) and trade secrets (TS), which is protected by Defend Trade Secrets Act 2016, © DrJ Engineering, LLC

7 Certified Performance[30]

7.1 All construction methods shall conform to accepted engineering practices to ensure durable, livable, and safe construction and shall demonstrate acceptable workmanship reflecting journeyman quality of work of the various trades.[31]

7.2 The strength and rigidity of the component parts and/or the integrated structure shall be determined by engineering analysis or by suitable load tests to simulate the actual loads and conditions of application that occur.[32]

8 Regulatory Evaluation and Accepted Engineering Practice

8.1 Power Pro Structural Wood Screws comply with the following legislatively adopted regulations and/or accepted engineering practice for the following reasons:

8.1.1 Use for attachment of deck ledgers to the building structure. This application includes attachments to Spruce Pine-Fir (SPF) band joists[33] and Oriented Strand Board (OSB) band joists.

8.1.2 Lateral strength of ledger connections to wood-framed walls. This application includes zero, one, or two layers of $^{5}/_{8}$" Gypsum Wallboard (GWB) between the ledger and the wall studs.

8.2 For conventionally framed buildings, the deck ledger is required to be attached to the band joist in accordance with IBC Section 1604.8.3 or IRC Section R507.9, as applicable.

8.3 Where a band joist is not used, as in some truss installations, an engineered design is required.

8.4 Any building code, regulation and/or accepted engineering evaluations (e.g., research reports, duly authenticated reports, etc.) that are conducted for this Listing were performed by DrJ, which is an ISO/IEC 17065 accredited certification body and a professional engineering company operated by RDP or approved sources. DrJ is qualified[34] to practice product and regulatory compliance services within its scope of accreditation and engineering expertise,[35] respectively.

8.5 Engineering evaluations are conducted with DrJ's ANAB accredited ICS code scope of expertise, which is also its areas of professional engineering competence.

9 Installation

9.1 Installation shall comply with the approved construction documents, the manufacturer installation instructions, this report, and the applicable building code.

9.2 In the event of a conflict between the manufacturer installation instructions and this report, contact the manufacturer for counsel on the proper installation method.

9.3 For applications outside the scope of this report, an engineered design is required.

9.4 *Deck Ledger to Band Joist Installation Procedure*

9.4.1 Choose Power Pro Structural Wood Screws of sufficient length so that the threads fully engage the rim material and the fastener tip extends beyond the back face of the rim material when fully seated against the installed ledger board.

9.4.2 Drive the fasteners through the ledger and exterior sheathing. Continue into the rim joist until the head is drawn firm and the topside of the head is flush to the surface of the ledger board. Do not overdrive.

9.4.2.1 Lead holes are not required, but may be used where lumber is prone to splitting using the provisions in the NDS.

9.4.3 Stagger the fasteners from the top to the bottom along the length of the ledger while maintaining the required edge and end distances as shown in **Figure 4** and **Figure 5**.

9.4.4 As an example, **Figure 4** shows a detail of the Power Pro LedgerTite Structural Wood Screw deck connection, including minimum edge and end distances.

Information contained in this report was developed using report holder's confidential intellectual property (IP) and trade secrets (TS), which is protected by Defend Trade Secrets Act 2016, © DrJ Engineering, LLC

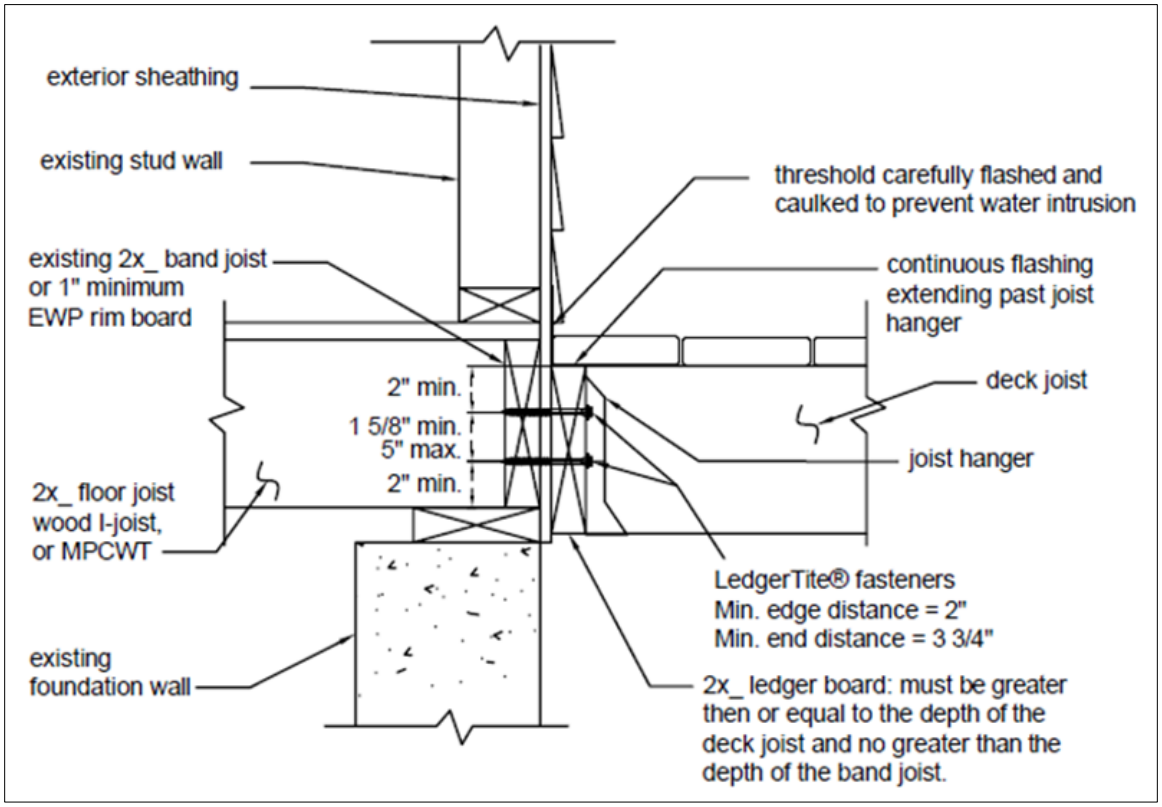

Figure 4. Power Pro LedgerTite Structural Wood Screws Deck Connection

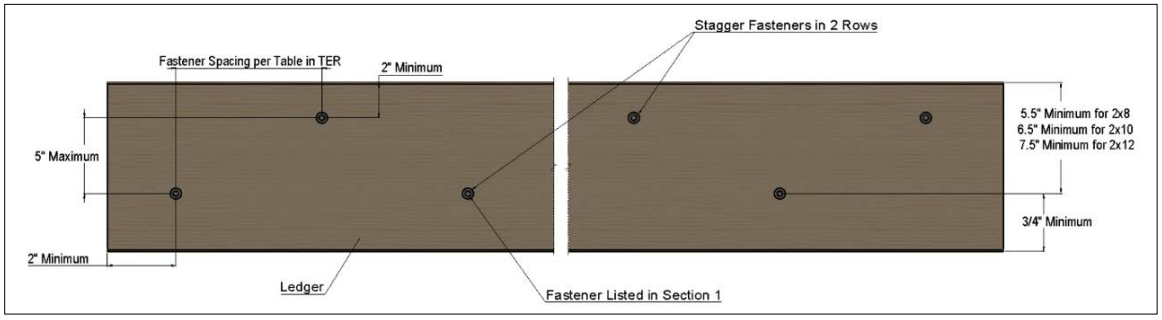

Figure 5. Power Pro LedgerTite Structural Wood Screws Deck Connection (Front-View)

9.5 *Ledger to Stud Installation Procedure*

9.5.1 Choose one of the Power Pro Structural Wood Screws listed in **Table 3**.

9.5.2 Fasteners shall be centered in the stud.

9.5.2.1 The stud minimum end distance is $6^{3}/_{4}$" when loaded toward the end and 4" when loaded away from the end.

9.5.2.2 Fasteners shall be installed with a minimum end distance of 6" on the ledger.

9.5.3 *Without GWB Interlayer:*

9.5.3.1 Installation details for ledger to stud connections without GWB for 2" x 6", 2" x 8", and 2" x 10" ledgers are shown in **Figure 6**, **Figure 7**, and **Figure 8**, respectively.

Information contained in this report was developed using report holder's confidential intellectual property (IP) and trade secrets (TS), which is protected by Defend Trade Secrets Act 2016, © DrJ Engineering, LLC

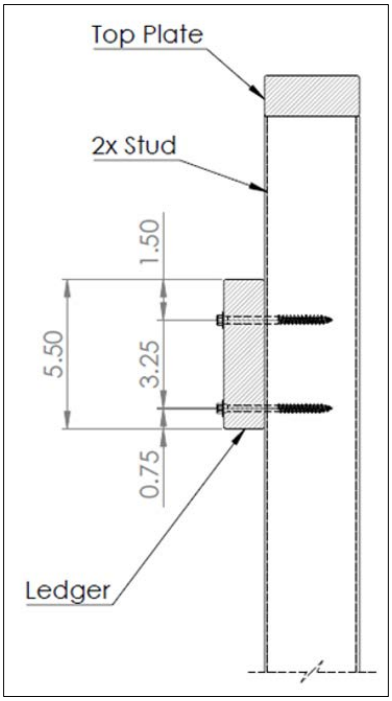

Figure 6. 2" x 6" Ledger Directly Attached to Stud

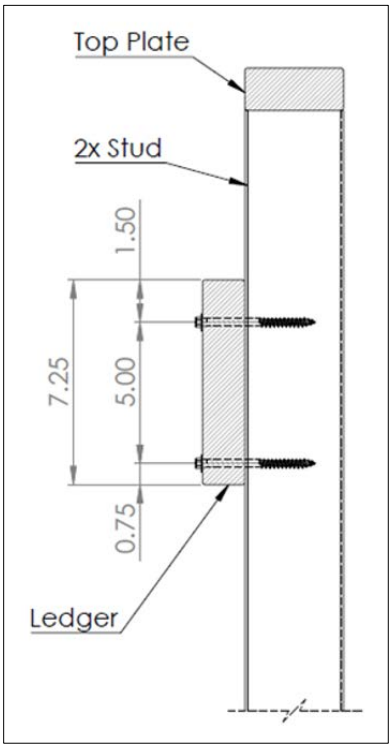

Figure 7. 2" x 8" Ledger Directly Attached to Stud

Information contained in this report was developed using report holder's confidential intellectual property (IP) and trade secrets (TS), which is protected by Defend Trade Secrets Act 2016, © DrJ Engineering, LLC

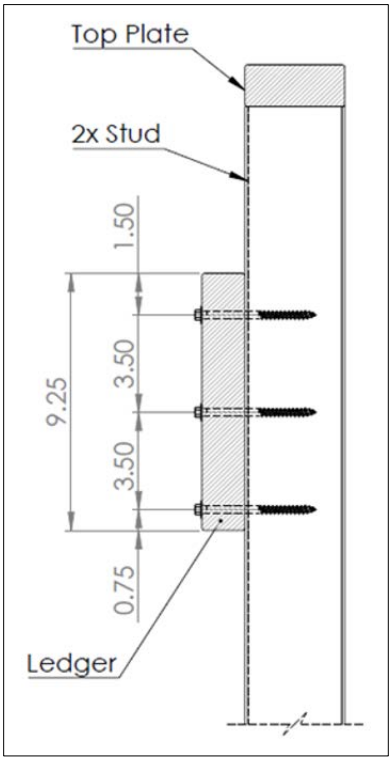

Figure 8. 2" x 10" Ledger Directly Attached to Stud

9.5.4 *With One Layer GWB Interlayer:*

9.5.4.1 Installation details for ledger to stud connections with one single layer of GWB for 2" x 6", 2" x 8", and 2" x 10" ledgers are shown in **Figure 9**, **Figure 10**, and **Figure 11**, respectively.

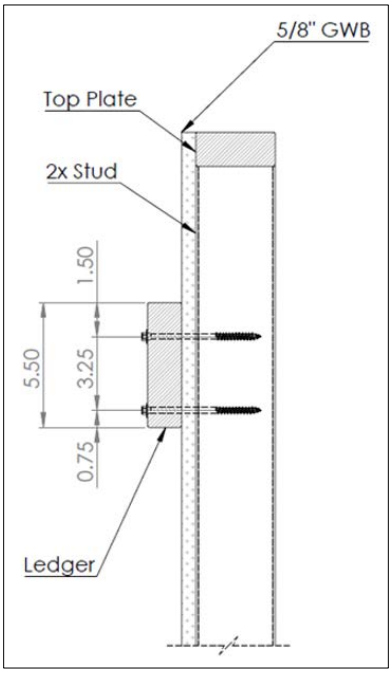

Figure 9. 2" x 6" Ledger Attached to Stud through One Layer of GWB

Information contained in this report was developed using report holder's confidential intellectual property (IP) and trade secrets (TS), which is protected by Defend Trade Secrets Act 2016, © DrJ Engineering, LLC

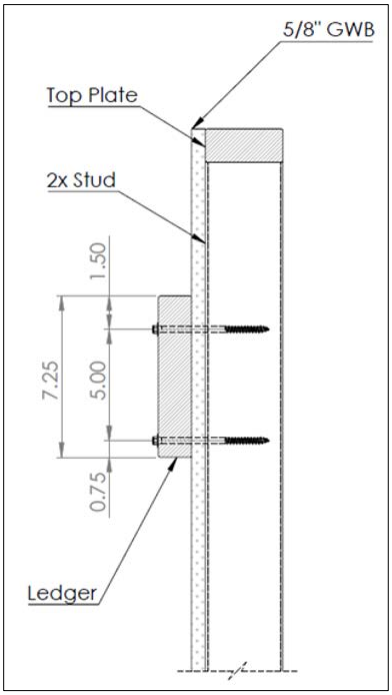

Figure 10. 2" x 8" Ledger Attached to Stud through One Layer of GWB

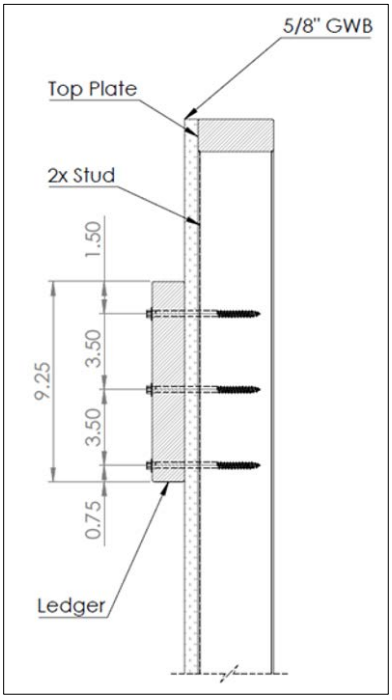

Figure 11. 2" x 10" Ledger Attached to Stud through One Layer of GWB

9.5.5 *With Two Layers GWB Interlayer:*

9.5.5.1 Installation details for ledger to stud connections with a double layer of GWB for 2" x 6", 2" x 8", and 2" x 10" ledgers are shown in **Figure 12**, **Figure 13**, and **Figure 14**, respectively.

9.5.5.2 An example of the spacing pattern is presented in **Figure 15**.

Information contained in this report was developed using report holder's confidential intellectual property (IP) and trade secrets (TS), which is protected by Defend Trade Secrets Act 2016, © DrJ Engineering, LLC

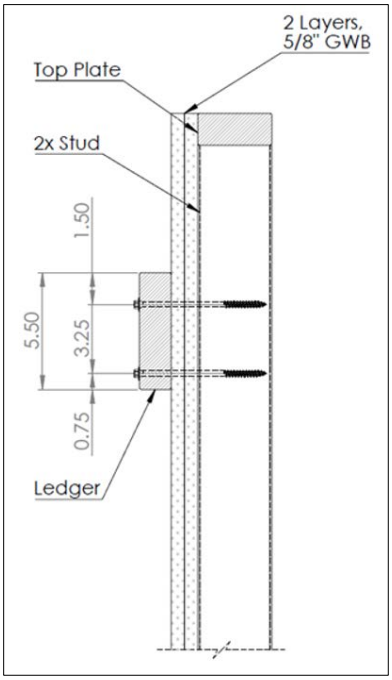

Figure 12. 2" x 6" Ledger Attached to Stud through Two Layers of GWB

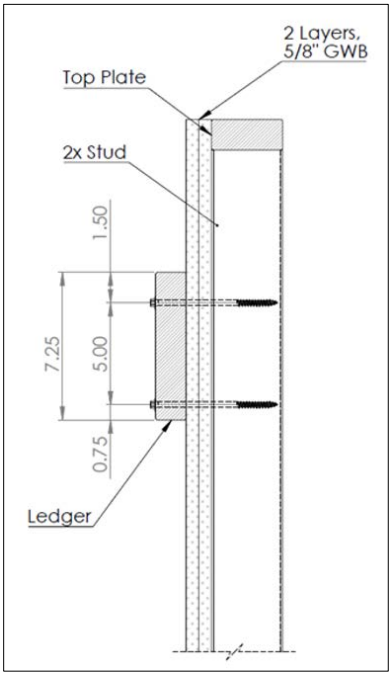

Figure 13. 2" x 8" Ledger Attached to Stud through Two Layers of GWB

Information contained in this report was developed using report holder's confidential intellectual property (IP) and trade secrets (TS), which is protected by Defend Trade Secrets Act 2016, © DrJ Engineering, LLC

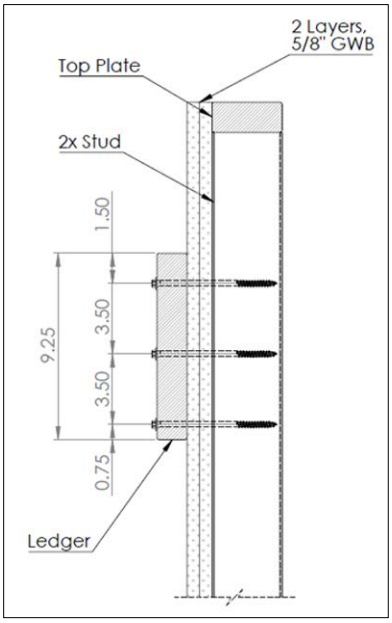

Figure 14. 2" x 10" Ledger Attached to Stud through Two Layers of GWB

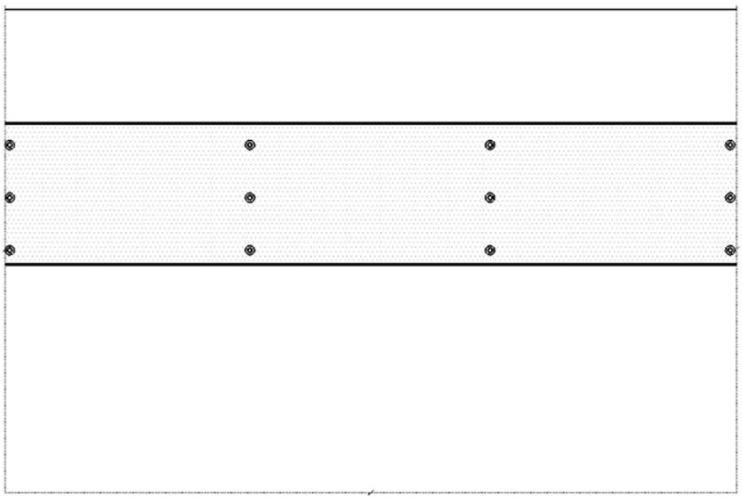

Figure 15. 2" x 10" Ledger Attached to Stud through Two Layers of GWB (Front-View)

9.6 *General Guidelines*

9.6.1 Fasteners shall be installed with the topside of the head flush to the surface of the wood member.

9.6.2 Fasteners shall not be overdriven.

9.6.3 Fasteners shall not be struck with a hammer during installation.

9.6.4 Lead holes are not required, but may be used where lumber is prone to splitting using the provisions in the NDS.

Information contained in this report was developed using report holder's confidential intellectual property (IP) and trade secrets (TS), which is protected by Defend Trade Secrets Act 2016, © DrJ Engineering, LLC

10 Substantiating Data

10.1 Testing has been performed under the supervision of a professional engineer and/or under the requirements of ISO/IEC 17025 as follows:

10.1.1 Properties for Power Pro Structural Wood Screws from approved sources.

10.1.2 Connection design value calculations by DrJ Engineering, LLC in accordance with NDS and accepted engineering practices.

10.2 Information contained herein may include the result of testing and/or data analysis by sources that are approved agencies, approved sources, and/or an RDP. Accuracy of external test data and resulting analysis is relied upon.

10.3 Where applicable, testing and/or engineering analysis are based upon provisions that have been codified into law through state or local adoption of regulations and standards. The developers of these regulations and standards are responsible for the reliability of published content. DrJ's engineering practice may use a regulation-adopted provision as the control. A regulation-endorsed control versus a simulation of the conditions of application to occur establishes a new material as being equivalent to the regulatory provision in terms of quality, strength, effectiveness, fire resistance, durability, and safety.

10.4 The accuracy of the provisions provided herein may be reliant upon the published properties of raw materials, which are defined by the grade mark, grade stamp, mill certificate, or duly authenticated reports from approved agencies and/or approved sources provided by the supplier. These are presumed to be minimum properties and relied upon to be accurate. The reliability of DrJ's engineering practice, as contained in this duly authenticated report, may be dependent upon published design properties by others.

10.5 *Testing and Engineering Analysis*

10.5.1 The strength, rigidity, and/or general performance of component parts and/or the integrated structure are determined by suitable tests that simulate the actual conditions of application that occur and/or by accepted engineering practice and experience.[36]

10.6 Where additional condition of use and/or regulatory compliance information is required, please search for Power Pro Structural Wood Screws on the DrJ Certification website.

11 Findings

11.1 As outlined in **Section 6**, Power Pro Structural Wood Screws have performance characteristics that were tested and/or meet applicable regulations. In addition, they are suitable for use pursuant to its specified purpose.

11.2 When used and installed in accordance with this duly authenticated report and the manufacturer installation instructions, Power Pro Structural Wood Screws shall be approved for the following applications:

11.2.1 As an alternative to the requirements of IBC Section 1604.8.3 and IRC Section R507.9.

11.2.2 Connection of ledger boards to wall studs is suitable with zero, one, or two layers of $^{5}/_{8}$" gypsum wallboard between the ledger and wall studs.

11.3 Unless exempt by state statute, when Power Pro Structural Wood Screws are to be used as a structural and/or building envelope component in the design of a specific building, the design shall be performed by an RDP.

11.4 Any application specific issues not addressed herein can be engineered by an RDP. Assistance with engineering is available from The Hillman Group.

Information contained in this report was developed using report holder's confidential intellectual property (IP) and trade secrets (TS), which is protected by Defend Trade Secrets Act 2016, © DrJ Engineering, LLC

11.5 IBC Section 104.2.3[37] (IRC Section R104.2.2[38] and IFC Section 104.2.3[39] are similar) in pertinent part state:

> 104.2.3 Alternative Materials, Design and Methods of Construction and Equipment. The provisions of this code are not intended to prevent the installation of any material or to prohibit any design or method of construction not specifically prescribed by this code, provided that any such alternative is not specifically prohibited by this code and has been approved.

11.6 **Approved:**[40] Building regulations require that the building official shall accept duly authenticated reports.[41]

11.6.1 An approved agency is *"approved"* when it is ANAB ISO/IEC 17065 accredited.

11.6.2 An approved source is *"approved"* when an RDP is properly licensed to transact engineering commerce.

11.6.3 Federal law, Title 18 US Code Section 242, requires that, where the alternative product, material, service, design, assembly, and/or method of construction is not approved, the building official shall respond in writing, stating the reasons why the alternative was not approved. Denial without written reason deprives a protected right to free and fair competition in the marketplace.

11.7 DrJ is a licensed engineering company, employs licensed RDPs and is an ANAB Accredited Product Certification Body – Accreditation #1131.

11.8 Through the IAF Multilateral Arrangement (MLA), this duly authenticated report can be used to obtain product approval in any jurisdiction or country because all ANAB ISO/IEC 17065 duly authenticated reports are equivalent.[42]

12 Conditions of Use

12.1 As defined in **Section 6**, where material and/or engineering mechanics properties are created for load resisting design purposes, the resistance to the applied load shall not exceed the ability of the defined properties to resist those loads using the principles of accepted engineering practice.

12.2 For deck ledger connections, Power Pro Structural Wood Screws spacing shall not exceed the values listed in **Table 2** and the provisions detailed in **Section 9**.

12.3 When Power Pro Structural Wood Screws are installed into studs, loads shall not exceed what are listed in **Table 3**.

12.4 As listed herein, Power Pro Structural Wood Screws can be used in:

12.4.1 Chemically treated (pressure preservatives and fire-retardants) and untreated wood in exterior use conditions.

12.5 When required by adopted legislation and enforced by the building official, also known as the Authority Having Jurisdiction (AHJ) in which the project is to be constructed:

12.5.1 Any calculations incorporated into the construction documents shall conform to accepted engineering practice and, when prepared by an approved source, shall be approved when signed and sealed.

12.5.2 This report and the installation instructions shall be submitted at the time of permit application.

12.5.3 At a minimum, these innovative products shall be installed per **Section 9**.

12.5.4 The review of this report by the AHJ shall comply with IBC Section 104.2.3.2 and IBC Section 105.3.1.

12.5.5 These innovative products have an internal quality control program and a third party quality assurance program in accordance with IBC Section 104.7.2, IBC Section 110.4, IBC Section 1703, IRC Section R104.7.2, and IRC Section R109.2.

12.5.6 The application of these innovative products in the context of this report is dependent upon the accuracy of the construction documents, implementation of installation instructions, inspection as required by IBC Section 110.3, IRC Section R109.2, and any other regulatory requirements that may apply.

Information contained in this report was developed using report holder's confidential intellectual property (IP) and trade secrets (TS), which is protected by Defend Trade Secrets Act 2016, © DrJ Engineering, LLC

12.6 The approval of this report by the AHJ shall comply with IBC Section 1707.1, where legislation states in part, *"the building official shall make, or cause to be made, the necessary tests and investigations; or the building official shall accept duly authenticated reports from approved agencies in respect to the quality and manner of use of new materials or assemblies as provided for in Section 104.2.3"*, all of IBC Section 104, and IBC Section 105.3.

12.7 Design loads shall be determined in accordance with the regulations adopted by the jurisdiction in which the project is to be constructed and/or by the building designer (i.e., owner or RDP).

12.8 The actual design, suitability, and use of this report for any particular building, is the responsibility of the owner or the authorized agent of the owner.

13 Identification

13.1 Power Pro Structural Wood Screws (Power Pro LedgerTite Structural Wood Screws, Power Pro Structural Lag Screws, and Power Pro TimberWood Structural Screws), as listed in **Section 1.1**, are identified by a label on the board or packaging material bearing the manufacturer name, product name, this report number, and other information to confirm code compliance.

13.2 Additional technical information can be found at www.hillmangroup.com.

14 Review Schedule

14.1 This report is subject to periodic review and revision. For the latest version, visit www.drjcertification.org.

14.2 For information on the status of this report, please contact DrJ Certification.

Information contained in this report was developed using report holder's confidential intellectual property (IP) and trade secrets (TS), which is protected by Defend Trade Secrets Act 2016, © DrJ Engineering, LLC

Appendix A
Code Requirements for Ledger Attachments

For guidance on designing the connection of the deck ledger to trusses where a band joist is not used, see the SBCA Tech Note: Attachment of Residential Deck Ledger to Metal Plate Connected Wood Truss Floor Systems.

1.1 IRC Section R507.8 contains the following code requirements (IBC Section 1604.8.3 is similar):

1.1.1 Where supported by attachment to an exterior wall, decks shall be positively anchored to the primary structure and designed for both vertical and lateral loads.

1.1.1.1 Attachment shall not be accomplished by the use of toenails or nails, subject to withdrawal.

1.2 IRC Section R507.9.1 details how vertical loads shall be transferred to band joists with ledgers:

1.2.1 IRC Section R507.9.1.1:

> Deck ledgers shall be a minimum 2-inch by 8-inch (51 mm by 203 mm) nominal, pressure-preservative-treated Southern pine, incised pressure-preservative-treated hem-fir, or approved, naturally durable, No. 2 grade or better lumber…

1.2.2 IRC Section R507.9.1.2:

> Band joists supporting a ledger shall be a minimum 2-inch-nominal (51 mm), spruce-pine-fir or better lumber or a minimum 1-inch (25 mm) nominal engineered wood rim boards in accordance with Section R502.1.7. Band joists shall bear fully on the primary structure capable of supporting all required loads.

1.2.3 IRC Section R507.9.1.3:

> Where ledgers are fastened in accordance with Table R507.9.1.3(1), fasteners shall comply with Section R507.2.3 and shall be installed in accordance with Table R507.9.1.3(2) and Figures R507.9.1.3(1) and R507.9.1.3(2).

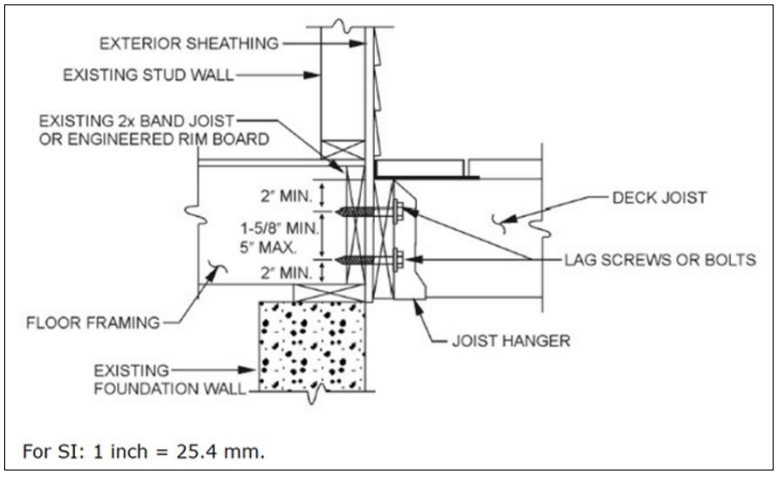

Figure A16. IRC Table R507.9.1.3(2): Placement of Lag Screws and Bolts in Band Joists

Information contained in this report was developed using report holder's confidential intellectual property (IP) and trade secrets (TS), which is protected by Defend Trade Secrets Act 2016, © DrJ Engineering, LLC

1.2.4 IRC Table R507.9.1.3(1) and IRC Table R507.9.1.3(2) cover the placement of lag screws or bolts in deck ledgers:

The tip of the lag screw shall fully extend beyond the inside face of the band joist.

Lag screws or bolts shall be staggered from the top to the bottom along the horizontal run of the deck ledger in accordance with Figure R507.9.1.3(1).

The minimum distance from bottom row of lag screws or bolts to the top edge of the ledger shall be in accordance with Figure R507.9.1.3(1).

CONNECTION DETAILS	JOIST SPAN						
	6′ and less	6′1″ to 8′	8′1″ to 10′	10′1″ to 12′	12′1″ to 14′	14′1″ to 16′	16′1″ to 18′
	On-center spacing of fasteners						
1/2-inch diameter lag screw with 1/2-inch maximum sheathing[c, d]	30	23	18	15	13	11	10
1/2-inch diameter bolt with 1/2-inch maximum sheathing[d]	36	36	34	29	24	21	19
1/2-inch diameter bolt with 1-inch maximum sheathing[e]	36	36	29	24	21	18	16

For SI: 1 inch = 25.4 mm, 1 foot = 304.8 mm, 1 pound per square foot = 0.0479 kPa.

a. Ledgers shall be flashed in accordance with Section R703.4 to prevent water from contacting the house band joist.
b. Snow load shall not be assumed to act concurrently with live load.
c. The tip of the lag screw shall fully extend beyond the inside face of the band joist.
d. Sheathing shall be wood structural panel or solid sawn lumber.
e. Sheathing shall be permitted to be wood structural panel, gypsum board, fiberboard, lumber or foam sheathing. Up to 1/2-inch thickness of stacked washers shall be permitted to substitute for up to 1/2 inch of allowable sheathing thickness where combined with wood structural panel or lumber sheathing.

Figure A17. IRC Table R507.9.1.3(1): Deck Ledger Connection to Band Joist[A,B]
(Deck live load = 40-psf, deck dead load = 10-psf, snow load ≤ 40-psf)

CONNECTION DETAILS	JOIST SPAN						
	6′ and less	6′1″ to 8′	8′1″ to 10′	10′1″ to 12′	12′1″ to 14′	14′1″ to 16′	16′1″ to 18′
	On-center spacing of fasteners						
1/2-inch diameter lag screw with 1/2-inch maximum sheathing[c, d]	30	23	18	15	13	11	10
1/2-inch diameter bolt with 1/2-inch maximum sheathing[d]	36	36	34	29	24	21	19
1/2-inch diameter bolt with 1-inch maximum sheathing[e]	36	36	29	24	21	18	16

For SI: 1 inch = 25.4 mm, 1 foot = 304.8 mm, 1 pound per square foot = 0.0479 kPa.

a. Ledgers shall be flashed in accordance with Section R703.4 to prevent water from contacting the house band joist.
b. Snow load shall not be assumed to act concurrently with live load.
c. The tip of the lag screw shall fully extend beyond the inside face of the band joist.
d. Sheathing shall be wood structural panel or solid sawn lumber.
e. Sheathing shall be permitted to be wood structural panel, gypsum board, fiberboard, lumber or foam sheathing. Up to 1/2-inch thickness of stacked washers shall be permitted to substitute for up to 1/2 inch of allowable sheathing thickness where combined with wood structural panel or lumber sheathing.

Figure A18. IRC Table R507.9.1.3(2): Placement of Lag Screws and Bolts in Deck Ledgers and Band Joists

Information contained in this report was developed using report holder's confidential intellectual property (IP) and trade secrets (TS), which is protected by Defend Trade Secrets Act 2016, © DrJ Engineering, LLC

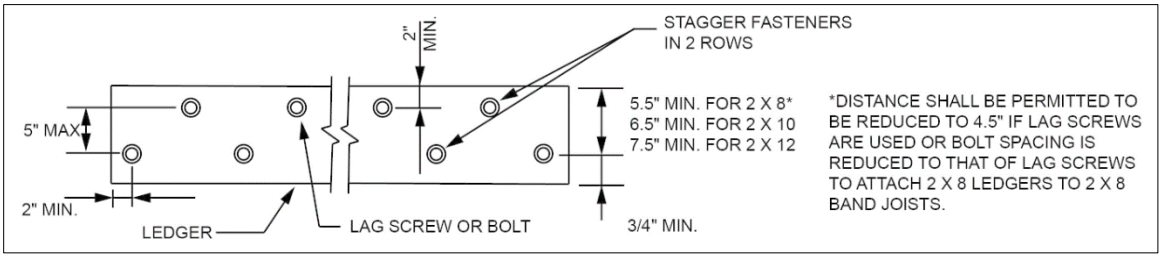

Figure 19. Figure IRC R507.9.1.3(1): Placement of Lag Screws and Bolts in Ledgers

Information contained in this report was developed using report holder's confidential intellectual property (IP) and trade secrets (TS), which is protected by Defend Trade Secrets Act 2016, © DrJ Engineering, LLC

Notes

1 For more information, visit drjcertification.org or call us at 608-310-6748.

2 2021 IRC Section R317.3

3 2021 IRC Section R317.3

4 Capitalized terms and responsibilities are defined pursuant to the applicable building code, applicable reference standards, the latest edition of TPI 1, the NDS, AISI S202, US professional engineering law, Canadian building code, Canada professional engineering law, Qualtim External Appendix A: Definitions/Commentary, Qualtim External Appendix B: Project/Deliverables, Qualtim External Appendix C: Intellectual Property and Trade Secrets, definitions created within Design Drawings and/or definitions within Reference Sheets. Beyond this, terms not defined shall have ordinarily accepted meanings as the context implies. Words used in the present tense include the future; words stated in the masculine gender include the feminine and neuter; the singular number includes the plural and the plural, the singular.

5 https://up.codes/viewer/mississippi/ibc-2024/chapter/17/special-inspections-and-tests#1702

6 Alternative Materials, Design and Methods of Construction and Equipment: The provisions of any regulation code are not intended to prevent the installation of any material or to prohibit any design or method of construction not specifically prescribed by a regulation. Please review https://www.justice.gov/atr/mission and https://up.codes/viewer/mississippi/ibc-2024/chapter/1/scope-and-administration#104.2.3

7 https://up.codes/viewer/mississippi/ibc-2024/chapter/17/special-inspections-and-tests#1706.2:~:text=the%20design%20strengths%20and%20permissible%20stresses%20shall%20be%20established%20by%20tests

8 The design strengths and permissible stresses of any structural material shall conform to the specifications and methods of design of accepted engineering practice. https://up.codes/viewer/mississippi/ibc-2024/chapter/17/special-inspections-and-tests#1706.1:~:text=Conformance%20to%20Standards-,The%20design%20strengths%20and%20permissible%20stresses,-of%20any%20structural

9 https://up.codes/viewer/mississippi/ibc-2024/chapter/17/special-inspections-and-tests#1707.1:~:text=the%20building%20official%20shall%20make%2C%20or%20cause%20to%20be%20made%2C%20the%20necessary%20tests%20and%20investigations%3B%20or%20the%20building%20official%20shall%20accept%20duly%20authenticated%20reports%20from%20approved%20agencies%20in%20respect%20to%20the%20quality%20and%20manner%20of%20use%20of%20new%20materials%20or%20assemblies%20as%20provided%20for%20in%20Section%20104.2.3.

10 https://up.codes/viewer/mississippi/ibc-2024/chapter/17/special-inspections-and-tests#1703.4.2

11 https://up.codes/viewer/mississippi/ibc-2024/chapter/2/definitions#approved_agency

12 https://up.codes/viewer/mississippi/ibc-2024/chapter/2/definitions#approved_source

13 https://www.law.cornell.edu/uscode/text/18/1832 (b) Any organization that commits any offense described in subsection (a) shall be fined not more than the greater of $5,000,000 or 3 times the value of the stolen trade secret to the organization, including expenses for research and design and other costs of reproducing the trade secret that the organization has thereby avoided. The federal government and each state have a public records act. To follow DTSA and comply state public records and trade secret legislation requires approval through ANAB ISO/IEC 17065 accredited certification bodies or approved sources. For more information, please review this website: Intellectual Property and Trade Secrets.

14 https://www.nspe.org/resources/issues-and-advocacy/professional-policies-and-position-statements/regulation-professional AND https://apassociation.org/list-of-engineering-boards-in-each-state-archive/

15 https://www.cbitest.com/accreditation/

16 https://up.codes/viewer/mississippi/ibc-2024/chapter/1/scope-and-administration#104.1:~:text=directed%20to%20enforce%20the%20provisions%20of%20this%20code

17 https://up.codes/viewer/mississippi/ibc-2024/chapter/1/scope-and-administration#104.2.3 AND https://up.codes/viewer/mississippi/ibc-2024/chapter/1/scope-and-administration#105.3.1

18 https://up.codes/viewer/mississippi/ibc-2024/chapter/17/special-inspections-and-tests#1707.1

19 https://iaf.nu/en/about-iaf-mla/#:~:text=Once%20an%20accreditation%20body%20is%20a%20signatory%20of%20the%20IAF%20MLA%2C%20it%20is%20required%20to%20recognise%20certificates%20and%20validation%20and%20verification%20statements%20issued%20by%20conformity%20assessment%20bodies%20accredited%20by%20all%20other%20signatories%20of%20the%20IAF%20MLA%2C%20with%20the%20appropriate%20scope

20 True for all ANAB accredited product evaluation agencies and all International Trade Agreements.

21 https://www.justice.gov/crt/deprivation-rights-under-color-law AND https://www.justice.gov/atr/mission

22 Unless otherwise noted, the links referenced herein use un-amended versions of the 2024 International Code Council (ICC) 2024 International Code Council (ICC) model codes as foundation references. Mississippi versions of the IBC 2024 and the IRC 2024 are un-amended. This material, product, design, service and/or method of construction also complies with the 2000-2012 versions of the referenced codes and the standards referenced therein. As pertinent to this technical and code compliance evaluation, CBI and/or DrJ staff have reviewed any state or local regulatory amendments to assure this report is in compliance.

23 See Adoptions by Publisher for the latest adoption of a non-amended or amended model code by the local jurisdiction. https://up.codes/codes/general

24 See Adoptions by Publisher for the latest adoption of a non-amended or amended model code by state. https://up.codes/codes/general

25 https://www.ecfr.gov/current/title-24/subtitle-B/chapter-XX/part-3282/subpart-A/section-3282.14

26 https://www.ecfr.gov/current/title-24/subtitle-B/chapter-XX/part-3280

27 https://www.ecfr.gov/current/title-24/subtitle-B/chapter-XX/part-3280#p-3280.2(Listed%20or%20certified); https://up.codes/viewer/mississippi/ibc-2024/chapter/2/definitions#listed AND https://up.codes/viewer/mississippi/ibc-2024/chapter/2/definitions#labeled

28 2021 IBC Section 104.11

29 2021 IRC Section 104.11

30 https://up.codes/viewer/mississippi/ibc-2024/chapter/17/special-inspections-and-tests#1703.4

31 https://www.ecfr.gov/current/title-24/subtitle-B/chapter-XX/part-3280#:~:text=All%20construction%20methods%20shall%20be%20in%20conformance%20with%20accepted%20engineering%20practices%20to%20insure%20durable%2C%20livable%2C%20and%20safe%20housing%20and%20shall%20demonstrate%20acceptable%20workmanship%20reflecting%20journeyman%20quality%20of%20work%20of%20the%20various%20trades

Information contained in this report was developed using report holder's confidential intellectual property (IP) and trade secrets (TS), which is protected by Defend Trade Secrets Act 2016, © DrJ Engineering, LLC

[32] https://www.ecfr.gov/current/title-24/subtitle-B/chapter-XX/part-3280#:~:text=The%20strength%20and%20rigidity%20of%20the%20component%20parts%20and/or%20the%20integrated%20structure%20shall%20be%20determined%20by%20engineering%20analysis%20or%20by%20suitable%20load%20tests%20to%20simulate%20the%20actual%20loads%20and%20conditions%20of%20application%20that%20occur

[33] The term *"band joist"* is used throughout this report. Other regional terms synonymous with band joist include rim board, band board, header board and header joist.

[34] Qualification is performed by a legislatively defined Accreditation Body. ANSI National Accreditation Board (ANAB) is the largest independent accreditation body in North America and provides services in more than 75 countries. DrJ is an ANAB accredited product certification body.

[35] https://anabpd.ansi.org/Accreditation/product-certification/AllDirectoryDetails?prgID=1&orgID=2125&statusID=4#:~:text=Bill%20Payment%20Date-,Accredited%20Scopes,-13%20ENVIRONMENT.%20HEALTH

[36] See Code of Federal Regulations (CFR) Title 24 Subtitle B Chapter XX Part 3280 for definition: https://www.ecfr.gov/current/title-24/subtitle-B/chapter-XX/part-3280

[37] 2021 IBC Section 104.11

[38] 2021 IRC Section R104.11

[39] 2018: https://up.codes/viewer/wyoming/ifc-2018/chapter/1/scope-and-administration#104.9 AND 2021: https://up.codes/viewer/wyoming/ibc-2021/chapter/1/scope-and-administration#104.11

[40] Approved is an adjective that modifies the noun after it. For example, Approved Agency means that the Agency is accepted officially as being suitable in a particular situation. This example conforms to IBC/IRC/IFC Section 201.4 (https://up.codes/viewer/mississippi/ibc-2024/chapter/2/definitions#201.4) where the building code authorizes sentences to have an ordinarily accepted meaning such as the context implies.

[41] https://up.codes/viewer/mississippi/ibc-2024/chapter/17/special-inspections-and-tests#1707.1

[42] Multilateral approval is true for all ANAB accredited product evaluation agencies and all International Trade Agreements.

Information contained in this report was developed using report holder's confidential intellectual property (IP) and trade secrets (TS), which is protected by Defend Trade Secrets Act 2016, © DrJ Engineering, LLC