DrJ™ CERTIFICATION

Approved. Sealed. Code Compliant.

Technical Evaluation Report

TER 1509-03

Shear-X™ Bracket and RidgeVent™

Garwood Manufacturing Co Inc

Products:

Shear-X™ and RidgeVent™

Issue Date:

January 14, 2016

Revision Date:

January 5, 2023

Subject to Renewal:

January 1, 2023

LEGACY

COMPANY INFORMATION:

Garwood Manufacturing Co Inc
115 Lismore Ave
Glenside, PA 19038-4010

215-887-6600

DIVISION: 05 00 00 - METALS

SECTION: 05 50 00 - Metal Fabrications

DIVISION: 06 00 00 - WOOD, PLASTICS AND COMPOSITES

SECTION: 06 02 00 - Design Information

LEGACY

1 Products Evaluated[1]

1.1 Shear-X™ and RidgeVent™

1.1.1 Unless otherwise noted, "RidgeVent™" is used throughout this Technical Evaluation Report (TER) to mean any of the profiles listed herein. For a complete list of products covered, refer to Appendix A: Complete Listing of Garwood Products.

2 Applicable Codes and Standards[2,3]

2.1 *Codes*

2.1.1 *IBC—15, 18, 21: International Building Code®*

2.1.2 *IRC—15, 18, 21: International Residential Code®*

2.1.3 *FBC-B—17, 20: Florida Building Code – Building*[4]

2.2 *Standards and Referenced Documents*

2.2.1 *AISI S100: North American Specification for the Design of Cold-formed Steel Structural Members*

2.2.2 *ANSI/AWC NDS: National Design Specification (NDS) for Wood Construction*

2.2.3 *ASCE/SEI 7: Minimum Design Loads and Associated Criteria for Buildings and Other Structures*

2.2.4 *ASTM A653: Standard Specification for Steel Sheet, Zinc-Coated (Galvanized) or Zinc-Iron Alloy-Coated (Galvannealed) by the Hot-Dip Process*

2.2.5 *ASTM D1929: Standard Test Method for Determining Ignition Temperature of Plastics*

2.2.6 *ASTM D2843: Standard Test Method for Density of Smoke from the Burning or Decomposition of Plastics*

2.2.7 *ASTM D635: Standard Test Method for Rate of Burning and/or Extent and Time of Burning of Plastics in a Horizontal Position*

2.2.8 *ASTM D7147: Standard Specification for Testing and Establishing Allowable Loads of Joist Hangers*

2.2.9 *ASTM E2126: Standard Test Methods for Cyclic (Reversed) Load Test for Shear Resistance of Vertical Elements of the Lateral Force Resisting Systems for Buildings*

[1] For more information, visit drjcertification.org or call us at 608-310-6748.

[2] Unless otherwise noted, all references in this TER are from the 2018 version of the codes and the standards referenced therein. This material, design, or method of construction also complies with the 2000-2015 versions of the referenced codes and the standards referenced therein.

[3] All terms defined in the applicable building codes are italicized.

[4] All references to the *FBC-B* are the same as the 2018 *IBC*, unless otherwise noted in the supplement at the end of this document.

Confidential Intellectual Property is protected by Defend Trade Secrets Act 2016,
© 2023 DrJ Engineering, LLC

2.2.10 *ASTM F1667: Standard Specification for Driven Fasteners: Nails, Spikes, and Staples*

2.2.11 *TAS 100: Test Procedure for Wind and Wind Driven Rain Resistance of Discontinuous Roof Systems*

3 Performance Evaluation

3.1 Shear-X™ was evaluated to determine the ability to resist shear forces for the following conditions:

3.1.1 Performance of Shear-X™ used on light-frame wood construction roof assemblies using rafter or truss framing and wall assemblies to resist wind and seismic loads in accordance with *IBC* Section 1609 and *IBC* Section 1613 and *ASCE 7* Chapter 11 and Chapter 26.

3.2 RidgeVent™ was evaluated to determine the following:

3.2.1 Self-ignition temperature and flash ignition temperature performance in accordance with *ASTM D1929*.

3.2.2 Average smoke density rating performance in accordance with *ASTM D2843*.

3.2.3 Linear rate of burn performance in accordance with *ASTM D635*.

3.2.4 Wind-driven rain performance in accordance with Florida Building Code Test Protocol for High Velocity Hurricane Zone (*TAS 100*) and *FBC-B* Section 1523.6.5.2.13.

3.3 Any code compliance issues not specifically addressed in this section are outside the scope of this TER.

3.4 Any engineering evaluation conducted for this TER was performed within DrJ's ANAB accredited ICS code scope and/or the defined professional engineering scope of work on the dates provided herein.

4 Product Description and Materials

4.1 *Shear-X™*

4.1.1 Shear-X™ is a galvanized steel bracket designed to transfer shear forces in roof diaphragms across the vented ridge accommodating framing members spaced 16" and 24" on center (o.c.), see Figure 1.

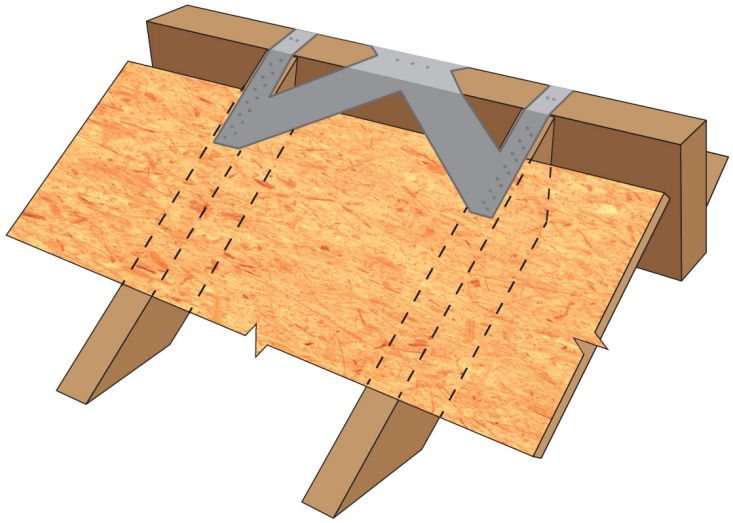

Figure 1. Shear-X™

4.1.2 A continuous ridge vent requires the removal of 1" to 1½" of sheathing on both sides of the ridge, leaving 6" to 12" at each end of the ridge uncut. This prevents the sheathing from transferring forces from one side of the ridge to the other side. Shear-X™ is designed to connect the sheathing across the ridge of a vented roof.

4.1.3 The bracket can be bent to accommodate any roof pitch from 0:12 to 12:12. Shear-X™ is connected to the roof framing members with 10d (0.131" x 3") nails installed in holes pre-punched in the metal bracket (see Figure 2 and Figure 3).

Confidential Intellectual Property is protected by Defend Trade Secrets Act 2016,
© 2023 DrJ Engineering, LLC

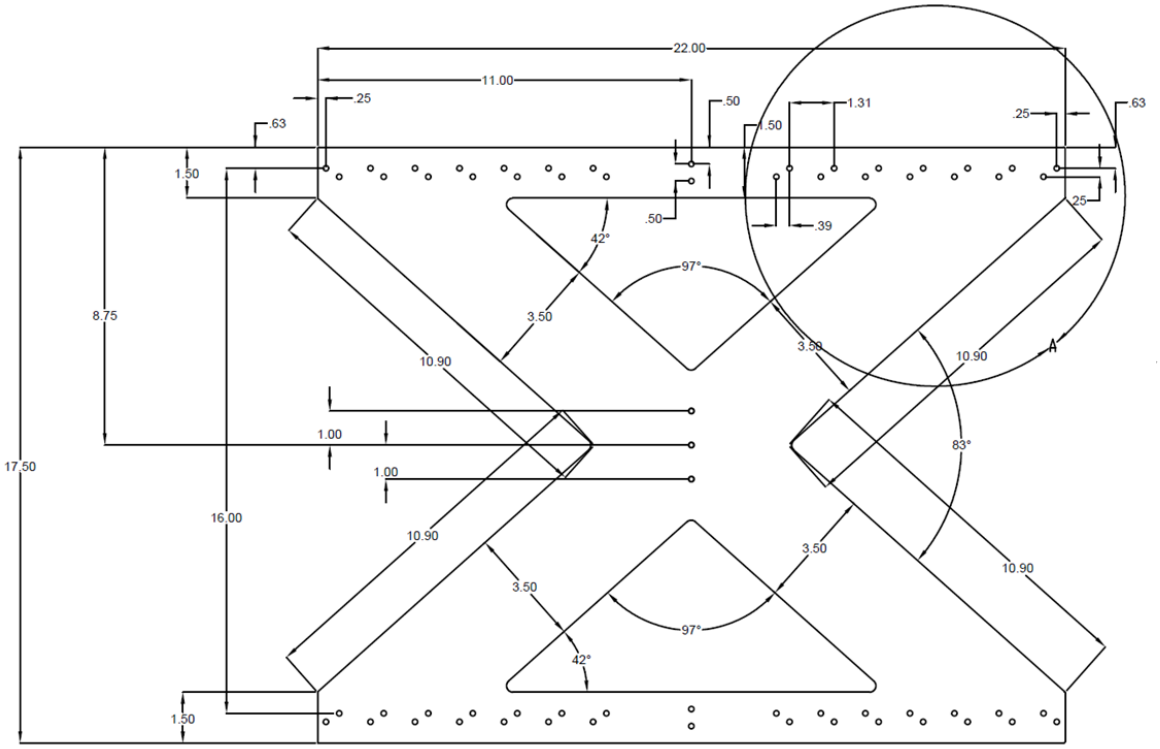

Figure 2. Shear-X™ 16" Bracket Dimension Details

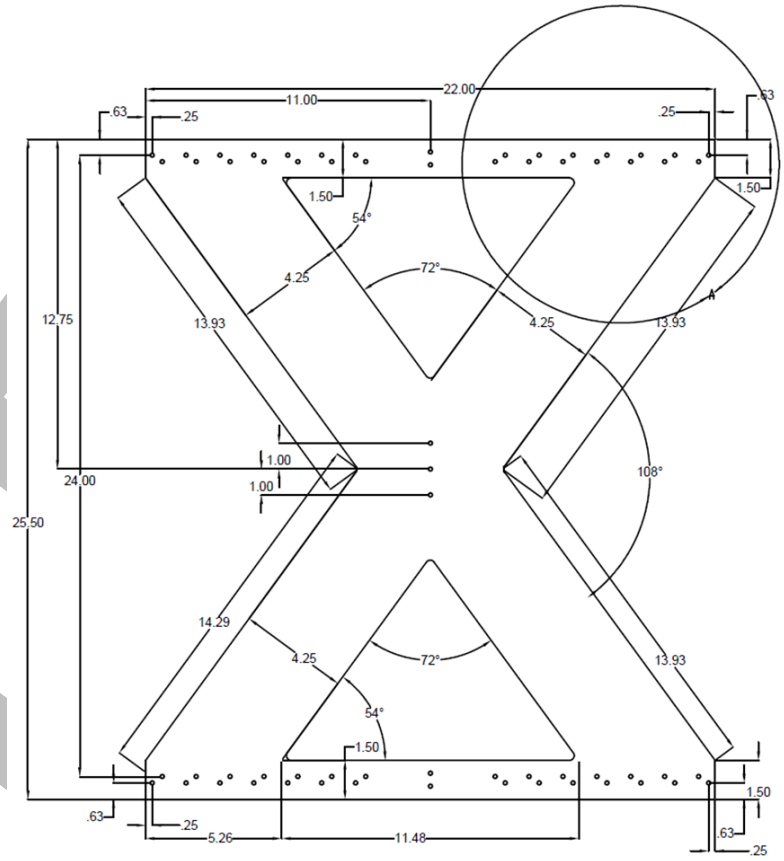

Figure 3. Shear-X™ 24" Bracket Dimension Details

Confidential Intellectual Property is protected by Defend Trade Secrets Act 2016,
© 2023 DrJ Engineering, LLC

4.1.4 Use in other applications where shear resistance is required such as braced wall design is permissible provided the building designer provides appropriate detailing.

4.1.5 *Materials:*

4.1.5.1 Shear-X™ brackets are made from 29 mil *ASTM A653* SS Grade 33 steel with a G90 zinc coating for corrosion resistance.

4.1.5.2 Available Sizes:

4.1.5.2.1 16" Bracket Thickness – 29 mil

4.1.5.2.2 24" Bracket Thickness – 29 mil

4.2 *RidgeVent™*

4.2.1 RidgeVent™ is a low-profile attic vent that is installed on vented-ridge roof systems.

4.2.2 *Materials:*

4.2.2.1 RidgeVent™ is made of Class A fire-rated, non-woven polymer mat that is available in various profiles and product names.

4.2.2.2 RidgeVent™ is produced in a number of profiles to fit most roofing types (e.g., slate, fiberglass shingle, cedar, metal, and tile). These profiles are sold under the following category names:

4.2.2.2.1 Shear-X™ RidgeVent™ (Table 4)

4.2.2.2.2 Mongoose® RidgeVent™ (Table 5)

4.2.2.2.3 ProfileVent® (Table 6 and Table 7)

4.2.2.2.4 TileVent® (Table 8)

4.2.2.2.5 RidgeVent™ for Shingle Roofs (Table 9)

4.2.2.2.6 Hip & RidgeVent™ (Table 10)

4.2.2.3 Additionally, various profiles are available within each of these categories to address specific profile shapes. See Appendix A: Complete Listing of Garwood Products for complete product listing of all available profiles and sizes.

5 Applications

5.1 *Shear-X™*

5.1.1 Shear-X™ can be used to resist shear forces from both wind and seismic loading when used in vented ridge roofing applications with pitches from 0:12 to 12:12.

5.1.2 Shear-X™ brackets have a minimum yield stress of 33 ksi and ultimate stress of 45 ksi.

5.1.3 Where the application exceeds the limitations set forth herein, design shall be permitted in accordance with accepted engineering procedures, experience, and technical judgment.

LEGACY

Confidential Intellectual Property is protected by Defend Trade Secrets Act 2016,
© 2023 DrJ Engineering, LLC

5.1.4 *Load Capacity:*

5.1.4.1 Shear-X™ provides the resistance capacities as listed in Table 1 when installed in accordance with the requirements of this TER.

Table 1. Average Allowable Load[1,2]

Connector	Framing Spacing (in)	Framing Method	Pitch	Allowable Load (lb)[3]
Shear-X™ 16029	16 o.c.	Rafter[4,5]	0/12	1945
			12/12	1820
		Truss[4,6]	0/12	1945
			12/12	1820
		Truss (No Ridge Blocking)	0/12	1795
			12/12	1135
Shear-X™ 24029	24 o.c.	Rafter[4,5]	0/12	2050
			12/12	2020
		Truss[4,6]	0/12	2050
			12/12	2020
		Truss (No Ridge Blocking)	0/12	1975
			12/12	1055

SI: 1 in = 25.4 mm, 1 lb = 4.45 N

1. Interpolation between pitches is permitted.
2. Joists, rafters, and trusses must be minimum No. 2 Spruce-Pine-Fir (SPF) 2x4 or better.
3. For wind design, allowable loads may be increased 40%.
4. The connection of the joist/rafter to the ridge beam/board and the truss to the blocking must be with a minimum of three (3) 12d (0.131" x 3¼") Smooth Shank Nails.
5. The size of the ridge beam/board used with joist/rafter construction shall be determined by the building designer but must be minimum No. 2 SPF 2x6.
6. The blocking installed between the trusses at the ridgeline shall be minimum No. 2 SPF 2x4.

5.1.4.2 When using Shear-X™ brackets in flat applications, use the resistance values shown for 0/12 pitch.

5.2 *RidgeVent™*

5.2.1 RidgeVent™ is designed to be compatible with Shear-X™ roof brackets.

5.2.2 RidgeVent™ can be used on roof designs with a minimum slope of 3:12.

5.2.3 *Self-Ignition and Flash Ignition:*

5.2.3.1 RidgeVent™ has the self-ignition and flash ignition characteristics shown in Table 2.

Table 2. Ignition Characteristics

Characteristic	Required	RidgeVent™(1)
Self-Ignition Temperature	> 650°F (343°C)	968°F (520°C)
Flash Ignition Temperature	–	950°F (510°C)

1. Tested in accordance with *ASTM D1929*

LEGACY

Confidential Intellectual Property is protected by Defend Trade Secrets Act 2016,
© 2023 DrJ Engineering, LLC

5.2.4 *Smoke Density:*

5.2.4.1 RidgeVent™ has the smoke density characteristics shown in Table 3.

Table 3. Smoke Density Characteristics

Characteristic	Required	RidgeVent™(1)
Average Smoke Density Rating	< 75	40.9
1. Tested in accordance with *ASTM D2843*		

5.3 *Rate of Burning*

5.3.1 RidgeVent™ exhibited no sustained burn and is therefore considered a Class CC1 product in accordance with *ASTM D635*.

5.4 *Wind and Rain Resistance*

5.4.1 RidgeVent™ was tested using wind speeds up to 110 mph for wind and wind driven rain resistance and meets all requirements for product resistance in accordance with *TAS 100.*

6 Installation

6.1 Installation shall comply with the manufacturer's installation instructions and this TER. In the event of a conflict between the manufacturer's installation instructions and this TER, the more restrictive shall govern.

6.2 *Shear X™*

6.2.1 Selection of the 16" or 24" Shear-X™ bracket will be determined by the distance between the roof framing members.

6.2.2 The size of the ridge beam/board used with joist/rafter construction shall be specified by the building designer but must be minimum No. 2 SPF 2x6. When metal plate connected wood trusses are used as the roof framing members, ridge blocking shall be minimum No. 2 SPF 2x4 members cut to fit tight between the trusses. The minimum attachment of the joists/rafters to the ridge beam/board and the blocking to the trusses shall be three (3) 12d (0.131" x 3¼") nails.

6.2.3 Use the pre-punched nail holes as guides for nailing to the roof framing. Shear-X™ brackets must be positioned such that all nails are driven into the joists/rafters, ridge beam/board, trusses, and blocking.

6.2.4 The number and spacing of Shear-X™ brackets is determined by the loads to be resisted in accordance with *ASCE 7* and is dependent on the building configuration and its location. The building designer shall identify the loads to be resisted and the spacing of the Shear-X™ brackets. In no case shall the brackets be spaced greater than 25' o.c.

6.2.5 The following instructions are shown with a ridge board and rafter construction. Installation with truss construction and ridge blocking is similar.

6.3 *RidgeVent™*

6.3.1 RidgeVent™ shall not be installed on roofs with a mean roof height greater than 33 ft.

6.3.2 RidgeVent™ shall be installed over approved roofing materials only.

6.3.3 Refer to manufacturer's installation instructions for the specific profile selected.

6.4 *Installation Procedure*

6.4.1 Prior to installing the Shear-X™ brackets, the installer must remove 1" to 1½" of sheathing on both sides of the ridge leaving 6" to 12" at each end of the ridge uncut (Figure 4).

LEGACY

Confidential Intellectual Property is protected by Defend Trade Secrets Act 2016,
© 2023 DrJ Engineering, LLC

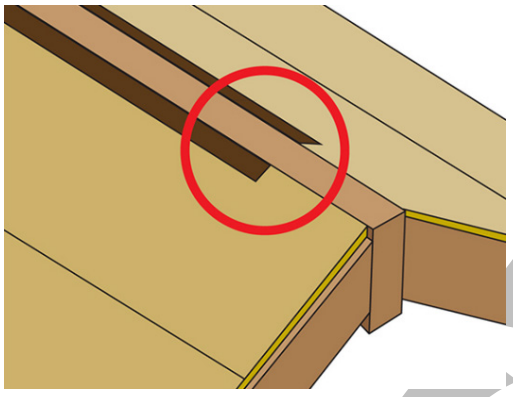

Figure 4. Prepare Ridge for Shear-X™ Installation

6.4.2 Center the Shear-X™ bracket on the ridgeline. Each end of the bracket must line up over the rafters/trusses below. Attach the bracket with 10d (0.131"x 3") nails in each pre-punched hole along the ridgeline (Figure 5).

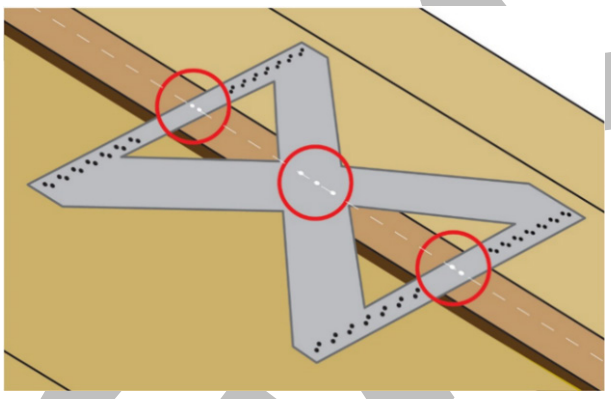

Figure 5. Shear-X™ Pre-punched Holes at Ridgeline

6.4.3 Bend the bracket tightly to the top of the roof sheathing to conform to the pitch of the roof. Secure each end of the bracket through the sheathing to the rafters/trusses with a minimum of four (4) 10d (0.131" x3") nails. Install the nails in the pre-punched holes closest to the ridge. Make sure the bracket remains flat against the sheathing (Figure 6).

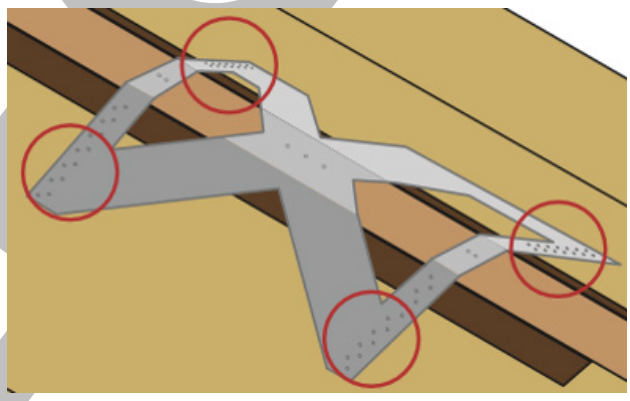

Figure 6. Bend Shear-X™

6.4.4 Complete the attachment of the bracket by installing the remaining nails (Figure 7). Be sure to nail directly into the rafters/trusses and NOT just into the sheathing.

LEGACY

Confidential Intellectual Property is protected by Defend Trade Secrets Act 2016,
© 2023 DrJ Engineering, LLC

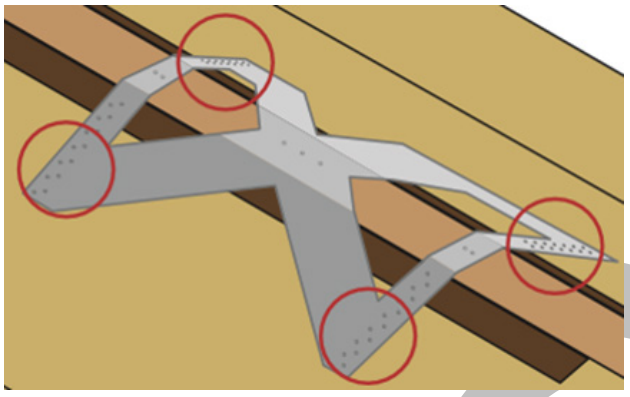

Figure 7. Shear-X™ Final Attachment

6.4.5 Roll out and install ridge vent along the ridgeline of roof according to manufacturer's installation instructions (Figure 8). Note: The ridge vent profile will vary from that shown based on the roof type and profile.

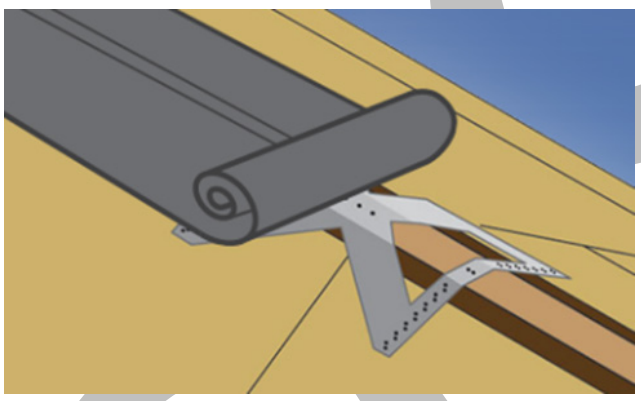

Figure 8. RidgeVent™ Installed Over Shear-X™

6.4.6 Install the ridge cap shingles according to shingle manufacturer's instructions (Figure 9).

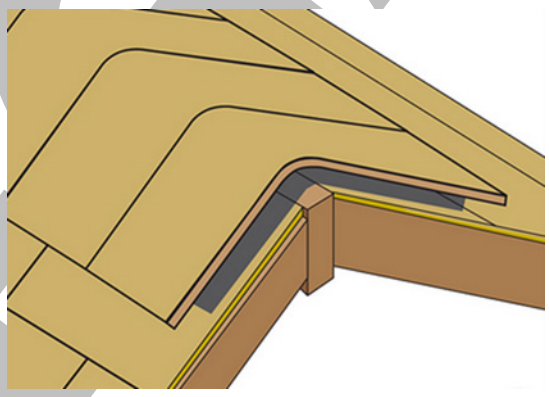

Figure 9. Ridge Cap Shingles Installed Post Shear-X™ Installation

7 Substantiating Data

7.1 Testing has been performed under the supervision of a professional engineer and/or under the requirements of ISO/IEC 17025 as follows:

7.1.1 Cyclic testing of Shear-X™ Brackets in accordance with *ASTM D7147* and *ASTM E2126*

7.1.2 Ignition temperature of plastics testing in accordance with *ASTM D1929*

7.1.3 Density of smoke from the burning or decomposition of plastics in accordance with *ASTM D2843*

Confidential Intellectual Property is protected by Defend Trade Secrets Act 2016,
© 2023 DrJ Engineering, LLC

7.1.4 Rate of burning and/or extent of time of burning of plastics in a horizontal position in accordance with *ASTM D635*

7.1.5 Wind and wind driven rain resistance and/or increased wind speed resistance of soffit ventilation strip and continuous or intermittent ventilation system installed at the ridge area testing in accordance with *TAS 100*

7.2 Information contained herein is the result of testing and/or data analysis by sources which conform to *IBC* Section 1703 and/or professional engineering regulations. DrJ relies upon accurate data to perform its ISO/IEC 17065 evaluations.

7.3 Where appropriate, DrJ's analysis is based on provisions that have been codified into law through state or local adoption of codes and standards. The providers of the codes and standards are legally responsible for their content. DrJ analysis may use code-adopted provisions as a control sample. A control sample versus a test sample establishes a product as being equivalent to that prescribed in this code in quality, *strength*, effectiveness, *fire resistance*, durability, and safety. Where the accuracy of the provisions provided herein is reliant upon the published properties of materials, DrJ relies upon the grade mark, grade stamp, mill certificate, and/or test data provided by material suppliers to be minimum properties. DrJ analysis relies upon these properties to be accurate.

8 Findings

8.1 When used and installed in accordance with this TER and the manufacturer's installation instructions, Shear-X™ complies with the applicable codes listed in Section 2, and is approved for the following:

8.1.1 Capacity to resist shear forces in light-frame wood construction roof assemblies using rafter or truss framing and wall assemblies in accordance with *IBC* Section 1609, *IBC* Section 1613, *ASCE 7* Chapter 11, and *ASCE 7* Chapter 26.

8.2 When used and installed in accordance with this TER and the manufacturer's installation instructions, the RidgeVent™ complies with the applicable codes listed in Section 2, and is approved for the following:

8.2.1 Self-ignition temperature and flash ignition temperature performance in accordance with *ASTM D1929*

8.2.2 Average smoke density rating performance in accordance with *ASTM D2843*

8.2.3 Linear rate of burn performance in accordance with *ASTM D635*

8.2.4 Wind-driven rain performance in accordance with *TAS 100*

8.3 Building codes require data from valid *research reports* be obtained from *approved sources* (i.e., licensed *registered design professionals* [RDPs]).

8.3.1 Building official approval of a licensed RDP is performed by verifying the RDP and/or their business entity is listed by the licensing board of the relevant *jurisdiction*.

8.4 Agencies who are accredited through ISO/IEC 17065 have met the code requirements for approval by the *building official*. DrJ is an ISO/IEC 17065 ANAB-Accredited Product Certification Body – Accreditation #1131 and employs RDPs.

8.5 Through ANAB accreditation and the IAF MLA, DrJ certification can be used to obtain product approval in any *jurisdiction* or country that has IAF MLA Members & Signatories to meet the Purpose of the MLA – "certified once, accepted everywhere."

8.6 *IBC* Section 104.11 (*IRC* Section R104.11 and *IFC* Section 104.10[5] are similar) states:

> **104.11 Alternative materials, design and methods of construction and equipment.** The provisions of this code are not intended to prevent the installation of any material or to prohibit any design or method of construction not specifically prescribed by this code…Where the alternative material, design or method of construction is not *approved*, the *building official* shall respond in writing, stating the reasons the alternative was not *approved*.

[5] 2018 *IFC* Section 104.9

LEGACY

9 Conditions of Use

9.1 Shear-X™ brackets are intended to be bent only one time. Never bend the brackets in opposite directions, as this will cause fatigue in the steel.

9.2 The number of brackets needed will vary and depend on the design of the building, applicable shear loads, and wind or seismic conditions. The Building Designer and Professional Engineer are responsible for calculating all necessary loads when designating the number of brackets needed based on those variables stated above.

9.3 Never space the brackets at greater than 25' o.c.

9.4 Where required by the *building official*, also known as the authority having jurisdiction (AHJ) in which the project is to be constructed, this TER and the installation instructions shall be submitted at the time of *permit* application.

9.5 Any generally accepted engineering calculations needed to show compliance with this TER shall be submitted to the AHJ for review and approval.

9.6 Design loads shall be determined in accordance with the building code adopted by the *jurisdiction* in which the project is to be constructed and/or by the building designer (e.g., *owner* or RDP).

9.7 At a minimum, this product shall be installed per Section 6 of this TER.

9.8 This product has an internal quality control program and a third-party quality assurance program in accordance with *IBC* Section 104.4 and Section 110.4 and *IRC* Section R104.4 and Section R109.2.

9.9 The actual design, suitability, and use of this TER, for any particular building, is the responsibility of the *owner* or the owner's authorized agent.

9.10 This TER shall be reviewed for code compliance by the AHJ in concert with *IBC* Section 104.

9.11 The implementation of this TER for this product is dependent on the design, quality control, third-party quality assurance, proper implementation of installation instructions, inspections required by *IBC* Section 110.3, and any other code or regulatory requirements that may apply.

10 Identification

10.1 The product(s) listed in Section 1.1 are identified by a label on the board or packaging material bearing the manufacturer’s name, product name, TER number, and other information to confirm code compliance.

10.2 For additional technical information, contact Garwood Manufacturing Co. Inc. directly at 215-887-6600.

11 Review Schedule

11.1 This TER is subject to periodic review and revision. For the most recent version, visit drjcertification.org.

11.2 For information on the current status of this TER, contact DrJ Certification.

LEGACY

Confidential Intellectual Property is protected by Defend Trade Secrets Act 2016,
© 2023 DrJ Engineering, LLC

Appendix A: Complete Listing of Garwood Products

Table 4. Shear-X™ RidgeVent™

Roll Size	Item #	Size	Net Free Area	Air Permeability
20 ft	00034	3/4" x 10-1/2" x 20'	17.2 sq in/ln ft	870 CFM

Table 5. Mongoose® RidgeVent™

Roll Size	Item #	Size	Net Free Area	Air Permeability
20 ft	00030	1" x 11" x 20'	14.3 sq in/ln ft	845 CFM

Table 6. ProfileVent® (Stick)

Stick Size	Item #	Size	Name	Net Free Area	Air Permeability
3 ft	16105	1" x 3"	3/4" Hi Rib Stick	23.3 sq in/ln ft	845 CFM
3 ft	16019	1-1/2" x 3"	R Panel Stick	31.7 sq in/ln ft	732 CFM

Table 7. ProfileVent®

Roll Size	Item #	Size	Name	Net Free Area	Air Permeability
20 ft	12001	1" x 12-1/4"	Ameridrain	23.3 sq in/ln ft	845 CFM
	12002		5-V Panel		
	12003		ProPanel II		
	12004		Strong Panel II		
	12005		3/4" Hi Rib		
	12006		M/U Panel		
	12007		Agri Panel		
	12008	1-1/4" x 12-1/4"	Delta Rib	30.9 sq in/ln ft	818 CFM
	12009		2.67 Corrugated		
	12010		Uni-Rib		
	12011		Royal Lock 12"		
	12012		Royal Lock 16"		
	12013		SL-12		
	12014		SL-16		
	12015	1-1/2" x 12-1/4"	Morton Hi Rib	31.7 sq in/ln ft	732 CFM
	12016		1" x 5/16" x 12"		
	12017		1" x 5/16" x 16"		
	12018		Spanline		
	12019		R Panel		
	12020		Multi Rib		
	12021	1" x 12-1/4"	Regal Rib	23.3 sq in/ln ft	845 CFM
	12022		Rugged Rib		

LEGACY

Confidential Intellectual Property is protected by Defend Trade Secrets Act 2016,
© 2023 DrJ Engineering, LLC

Roll Size	Item #	Size	Name	Net Free Area	Air Permeability
	12023	1-1/2" x 12-1/4"	Alu-Loc	31.7 sq in/ln ft	732 CFM
	12024	1-1/4" x 12-1/4"	7/8" Wide Rib	30.9 sq in/ln ft	818 CFM
	12027	1" x 12-1/4"	DuraClad	23.3 sq in/ln ft	845 CFM
	12028	1-1/2" x 12-1/4"	Tile Sheet 25/1100	31.7 sq in/ln ft	732 CFM
	12029	2" x 12-1/4"	LS-28 Large Tab	48.3 sq in/ln ft	702 CFM
	12030	1-1/4" x 12-1/4"	Ultra Lock	30.9 sq in/ln ft	818 CFM
	12031	1-1/2" x 12-1/4"	AP Panel	31.7 sq in/ln ft	732 CFM
	12032	2" x 12-1/4"	Medallion Loc 16"	48.3 sq in/ln ft	702 CFM
	12034	1-1/2" x 12-1/4"	Metalogic 3000 12"	31.7 sq in/ln ft	732 CFM
	12036	2-5/8" x 12-1/4"	SSR Panel 16"	-	760 CFM
	12037		SSR Panel 18"	-	
	12038	2" x 12-1/4"	Metalogic 2000 12"	48.3 sq in/ln ft	702 CFM
	12039	1-1/2" x 12-1/4"	Metalogic 3000 16"	31.7 sq in/ln ft	732 CFM
	12040	1-1/4" x 12-1/4"	Pro-S 12 Panel	30.9 sq in/ln ft	818 CFM
	12041	2" x 12-1/4"	Medallion Loc 18"	48.3 sq in/ln ft	702 CFM
	12042		Medallion Loc 14"		
	12043	1-1/4" x 12-1/4"	Omega Estructural	31.7 sq in/ln ft	818 CFM
	12044	2" x 12-1/4"	Omega Plus	48.3 sq in/ln ft	702 CFM
	12045	1-3/4" x 12-1/4"	1-1/2" SSR 12"	38.8 sq in/ln ft	
	12046		1-1/2" SSR 16"		
	12048	2" x 12-1/4"	RoofDeck A&B	48.3 sq in/ln ft	
	-	1" x 3"	Unprofiled	23.3 sq in/ln ft	845 CFM
	-	2" x 12-1/4"	Commercial Roofing	48.3 sq in/ln ft	702 CFM
50 ft	15001	1" x 12-1/4"	Ameridrain	23.3 sq in/ln ft	845 CFM
	15002		5-V Panel		
	15003		ProPanel II		
	15004		Strong Panel II		
	15005		3/4" Hi Rib		
	15006		M/U Panel		
	15007		Agri Panel		
	15008	1-1/4" x 12-1/4"	Delta Rib	30.9 sq in/ln ft	818 CFM
	15009		2.67 Corrugated		
	15010		Uni-Rib		
	15011		Royal Lock 12"		
	15012		Royal Lock 16"		
	15013		SL-12		

LEGACY

Confidential Intellectual Property is protected by Defend Trade Secrets Act 2016,
© 2023 DrJ Engineering, LLC

Roll Size	Item #	Size	Name	Net Free Area	Air Permeability
	15014		SL-16		
	15015	1-1/2" x 12-1/4"	Morton Hi Rib	31.7 sq in/ln ft	732 CFM
	15016		1" x 5/16" x 12"		
	15017		1" x 5/16" x 16"		
	15018		Spanline		
	15019		R Panel		
	15020		Multi Rib		
	15021	1" x 12-1/4"	Regal Rib	23.3 sq in/ln ft	845 CFM
	15022		Rugged Rib		
	15023	1-1/2" x 12-1/4"	Alu-Loc	31.7 sq in/ln ft	732 CFM
	15024	1-1/4" x 12-1/4"	7/8" Wide Rib	30.9 sq in/ln ft	818 CFM
	15027	1" x 12-1/4"	DuraClad	23.3 sq in/ln ft	845 CFM
	15028	1-1/2" x 12-1/4"	Tile Sheet 25/1100	31.7 sq in/ln ft	732 CFM
	15029	2" x 12-1/4"	LS-28 Large Tab	48.3 sq in/ln ft	702 CFM
	15030	1-1/4" x 12-1/4"	Ultra Lock	30.9 sq in/ln ft	818 CFM
	15031	1-1/2" x 12-1/4"	AP Panel	31.7 sq in/ln ft	732 CFM
	15032	2" x 12-1/4"	Medallion Loc 16"	48.3 sq in/ln ft	702 CFM
	15034	1-1/2" x 12-1/4"	Metalogic 3000 12"	31.7 sq in/ln ft	732 CFM
	15036	2-5/8" x 12-1/4"	SSR Panel 16"	-	760 CFM
	15037	2-5/8" x 12-1/4"	SSR Panel 18"	-	760 CFM
	15038	2" x 12-1/4"	Metalogic 2000 12"	48.3 sq in/ln ft	702 CFM
	15039	1-1/2" x 12-1/4"	Metalogic 3000 16"	31.7 sq in/ln ft	732 CFM
	15040	1-1/4" x 12-1/4"	Pro-S 12 Panel	30.9 sq in/ln ft	818 CFM
	15041	2" x 12-1/4"	Medallion Loc 18"	48.3 sq in/ln ft	702 CFM
	15042		Medallion Loc 14"		
	15043	1-1/4" x 12-1/4"	Omega Estructural	31.7 sq in/ln ft	818 CFM
	15044	2" x 12-1/4"	Omega Plus	48.3 sq in/ln ft	702 CFM
	15045	1-3/4" x 12-1/4"	1-1/2" SSR 12"	38.8 sq in/ln ft	
	15046		1-1/2" SSR 16"		
	15048	2" x 12-1/4"	RoofDeck A&B	48.3 sq in/ln ft	
	-	1" x 3"	Unprofiled	23.3 sq in/ln ft	845 CFM
	-	2" x 12-1/4"	Commercial Roofing	48.3 sq in/ln ft	702 CFM
100 ft	10001	1" x 12-1/4"	Ameridrain	23.3 sq in/ln ft	845 CFM
	10002		5-V Panel		
	10003		ProPanel II		
	10004		Strong Panel II		

LEGACY

Confidential Intellectual Property is protected by Defend Trade Secrets Act 2016,
© 2023 DrJ Engineering, LLC

Roll Size	Item #	Size	Name	Net Free Area	Air Permeability
	10005		3/4" Hi Rib		
	10006		M/U Panel		
	10007		Agri Panel		
	10008	1-1/4" x 12-1/4"	Delta Rib	30.9 sq in/ln ft	818 CFM
	10009		2.67 Corrugated		
	10010		Uni-Rib		
	10011		Royal Lock 12"		
	10012		Royal Lock 16"		
	10013		SL-12		
	10014		SL-16		
	10015	1-1/2" x 12-1/4"	Morton Hi Rib	31.7 sq in/ln ft	732 CFM
	10016		1" x 5/16" x 12"		
	10017		1" x 5/16" x 16"		
	10018		Spanline		
	10019		R Panel		
	10020		Multi Rib		
	10021	1" x 12-1/4"	Regal Rib	23.3 sq in/ln ft	845 CFM
	10022		Rugged Rib		
	10023	1-1/2" x 12-1/4"	Alu-Loc	31.7 sq in/ln ft	732 CFM
	10024	1-1/4" x 12-1/4"	7/8" Wide Rib	30.9 sq in/ln ft	818 CFM
	10027	1" x 12-1/4"	DuraClad	23.3 sq in/ln ft	845 CFM
	10028	1-1/2" x 12-1/4"	Tile Sheet 25/1100	31.7 sq in/ln ft	732 CFM
	10029	2" x 12-1/4"	LS-28 Large Tab	48.3 sq in/ln ft	702 CFM
	10030	1-1/4" x 12-1/4"	Ultra Lock	30.9 sq in/ln ft	818 CFM
	10031	1-1/2" x 12-1/4"	AP Panel	31.7 sq in/ln ft	732 CFM
	10032	2" x 12-1/4"	Medallion Loc 16"	48.3 sq in/ln ft	702 CFM
	10034	1-1/2" x 12-1/4"	Metalogic 3000 12"	31.7 sq in/ln ft	732 CFM
	10036	2-5/8" x 12-1/4"	SSR Panel 16"	-	760 CFM
	10037		SSR Panel 18"	-	
	10038	2" x 12-1/4"	Metalogic 2000 12"	48.3 sq in/ln ft	702 CFM
	10039	1-1/2" x 12-1/4"	Metalogic 3000 16"	31.7 sq in/ln ft	732 CFM
	10040	1-1/4" x 12-1/4"	Pro-S 12 Panel	30.9 sq in/ln ft	818 CFM
	10041	2" x 12-1/4"	Medallion Loc 18"	48.3 sq in/ln ft	702 CFM
	10042		Medallion Loc 14"		
	10043	1-1/4" x 12-1/4"	Omega Estructural	31.7 sq in/ln ft	818 CFM
	10044	2" x 12-1/4"	Omega Plus	48.3 sq in/ln ft	702 CFM

LEGACY

Confidential Intellectual Property is protected by Defend Trade Secrets Act 2016,
© 2023 DrJ Engineering, LLC

Roll Size	Item #	Size	Name	Net Free Area	Air Permeability
	10045	1-3/4" x 12-1/4"	1-1/2" SSR 12"	38.8 sq in/ln ft	
	10046		1-1/2" SSR 16"		
	10048	2" x 12-1/4"	RoofDeck A&B	48.3 sq in/ln ft	
	-	1" x 3"	Unprofiled	23.3 sq in/ln ft	845 CFM
	-	2" x 12-1/4"	Commercial Roofing	48.3 sq in/ln ft	702 CFM

Table 8. TileVent®

Roll Size	Item #	Size	Name	Net Free Area	Air Permeability
20 ft	00280	1-1/2" x 15-1/4" x 20'	TileVent® - Flat	31.7 sq in/ln ft	762 CFM
	00282	1-1/4" x 14" x 20'	Universal WaterDam	23.3 sq in/ln ft	872 CFM

Table 9. RidgeVent™ for Shingle Roofs

Roll Size	Item #	Size	Name	Net Free Area	Air Permeability
20 ft	00034	3/4" x 10-1/2" x 20'	The RidgeVent™	17.2 sq in/ln ft	870 CFM
	00035	3/4" x 8" x 20'			
10 ft	00036	3/4" x 10-1/2" x 10'			
20 ft	00037	3/4" x 9" x 20'			
4 ft	00038	3/4" x 10-1/2" x 4'	TRV4 (12/cs)		

Table 10. Hip & RidgeVent™

Roll Size	Item #	Size	Name	Net Free Area	Air Permeability
20 ft	12049	1" x 3"	Hip & Ridge w/ Glue	23.4 sq in/ln ft	922 CFM
	12052	1" x 2"			
	12051	1-1/2" x 3"		35.2 sq in/ln ft	702 CFM

LEGACY

Confidential Intellectual Property is protected by Defend Trade Secrets Act 2016,
© 2023 DrJ Engineering, LLC

Issue Date: January 25, 2022
Subject to Renewal: January 1, 2023

FBC Supplement to TER 1509-03

REPORT HOLDER: Garwood Manufacturing Co Inc

12 Evaluation Subject

12.1 Shear-X™ and RidgeVent™

13 Purpose and Scope

13.1 *Purpose*

13.1.1 The purpose of this Technical Evaluation Report (TER) supplement is to show Shear-X™ and RidgeVent™, recognized in TER 1509-03, have also been evaluated for compliance with the codes listed below as adopted by the Florida Building Commission.

13.2 *Applicable Code Editions*

13.2.1 *FBC-B—17, 20: Florida Building Code – Building*

14 Conclusions

14.1 Shear-X™ and RidgeVent™, described in TER 1509-03, comply with the *FBC-B* and are subject to the conditions of use described in this supplement.

14.2 Where there are variations between the *IBC* and the *FBC-B* applicable to this TER, they are listed here.

14.2.1 *FBC-B* Section 104.4 and Section 110.4 are reserved.

15 Conditions of Use

15.1 Shear-X™ and RidgeVent™, described in TER 1509-03, must comply with all of the following conditions:

15.1.1 All applicable sections in TER 1509-03

15.1.2 The design, installation, and inspections are in accordance with additional requirements of *FBC-B* Chapter 16 and Chapter 17, as applicable.

LEGACY

Confidential Intellectual Property is protected by Defend Trade Secrets Act 2016,
© 2023 DrJ Engineering, LLC